BARTEC BENKE

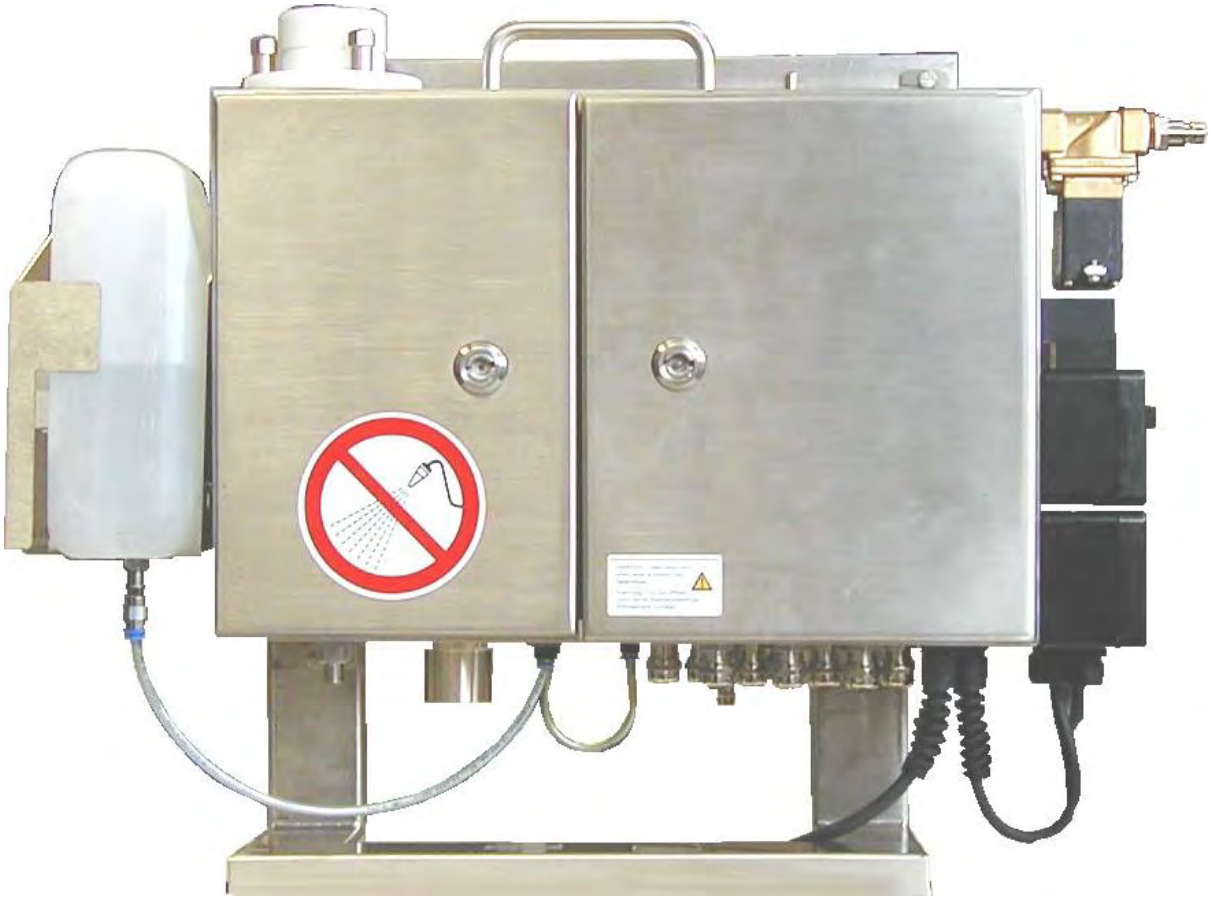

HYGROPHIL® H 4230-12 Ex Zone II

Operating Instructions

Softwareversion 1.042

BA 060207

BARTEC BENKE GmbH • Schulstraße 30 • 94239 Gotteszell Deutschland • Telefon +49(0)9929)-301-0 • Telefax +49(0)9929)-301-112
E-Mail: gotteszell@bartec-benke.de • Internet: www.bartec-benke.de

Table of Contents

	Contents	Page	Date of issue
1	**System description**	**1**	
1.1	Task and fields of use	1	
1.2	Measurement principle	2	
1.3	Structure of the humidity measurement system	2	
1.3.1	Measuring chamber	4	
1.3.2	Ejector	5	
1.3.3	Pressure-reduction controller	5	
1.3.4	Hose pump	5	
1.3.5	Water detector	5	
1.3.6	Pressure control module	5	
1.3.7	Rinse valve	5	
1.3.8	SILAS-Controller	6	
1.3.9	Control and evaluation electronics	7	
1.3.10	Controls and displays	8	
1.3.10.1	Keys	8	
1.3.10.2	Signal lamps	11	
1.3.10.3	Display	11	
1.3.11	Interfaces	12	
1.3.12	Temperature sensors	12	
1.3.13	Gas sampling hose	12	
1.3.14	Connection for external water detector	12	
1.3.15	Filter	12	
1.4	Technical data	13	
1.5	Details when ordering	15	
1.5.1	Basic equipment	15	
1.5.2	Accessories	15	
1.5.3	Spare parts	19	16.01.08
1.5.4	Individual parts for measuring chamber	22	
1.5.5	Consumables	23	
2	**Safety precautions**	**25**	
2.1	General information	25	
2.2	Equipment-specific instructions	25	
2.3	Installation location	26	
2.4	Electrical connection	26	
2.5	Operating the equipment	27	
3	**Installation**	**29**	
3.1	Wall mounting	30	
	Using the wall mount	31	
3.2	Mobile use	31	
3.3	Connection instructions	32	
3.3.1	Assignment of terminals	32	
3.3.2	Mains connection	32	
3.3.3	Temperature sensors	33	
3.3.4	Analogue outputs	33	
3.3.5	Warning- / ERROR contact	33	
3.3.6	PROFIBUS	34	
3.4	Mounting the gas sampling hose	35	
3.4.1	Mounting instructions	35	
3.4.2	Mounting sequence	37	
3.4.3	Electrical connection	37	
3.5	Compressed air connection	38	
3.5.1	Mounting sequence	39	
3.5.2	Setting the ejector’s operating pressure	40	

	Contents	Page	Date of issue
3.6	Pressure-reduction controller	41	
3.6.1	Assembly drawing	41	
3.6.2	Settings	42	
3.7	Filling the water storage tank	44	
3.8	External water detector	45	
3.8.1	Electrical connection	45	
3.8.2	Calibration	45	
3.8.3	Installation	46	
4	**Operation**	**47**	
4.1	Start-up	47	
4.2	Operating mode	47	
4.3	Configuration	48	
4.4	Changing the slave address	48	
5	**Programming**	**49**	
5.1	General notes	49	
5.1.1	Interaction	49	
5.1.2	Programming process	50	
5.2	Changing the program parameters	52	
5.2.1	Programming the analogue outputs	52	
5.2.2	Programming the hose heating parameters	53	
5.2.3	Programming the pump control	54	
5.2.4	Programming the equipment configuration	55	
5.2.4.1	Temperature sensors	55	
5.2.4.2	Safety switch-off („TIMEOUT”)	55	
5.2.4.3	Water detector	56	
5.2.4.4	Hose heating controller	56	
5.2.4.5	Compressed air control	56	
5.2.4.6	Flow setting	57	
5.2.4.7	Reference pressure	58	
5.2.4.8	Sensor calibration	58	
5.2.5	Limit monitoring	59	
6	**Maintenance**	**61**	
6.1	General information	61	
6.2	Testing the analogue outputs	62	
6.3	Measuring chamber	62	
6.3.1	Cleaning interval	62	
6.3.2	Types of dirt	63	
6.3.3	Disassembling the measuring chamber	64	
6.3.4	Dismantling the measuring chamber	68	
6.3.5	Changing the humid temperature sensor	70	
6.3.6	Changing the dry temperature sensor	71	
6.3.7	Cleaning the measuring chamber	72	
6.3.8	Assembling the measuring chamber	76	
6.4	Internal water detector	77	
6.5	Water pump	78	
6.6	Gas sampling hose	79	
6.7	Compressed air conditioner	79	
6.7.1	Emptying the condensate separator	79	
6.7.2	Cleaning the filter	80	
6.8	Pressure reduction controller	81	
6.9	Changing fuses	82	
6.10	Replacing the Display-/ Profibus-board	83	
6.11	Replacing the electronics board	84	
6.12	Replacing the proportional valve	86	

	Contents	Page	Date of issue
7	**Error and warning messages**	**87**	
8	**PROFIBUS**	**91**	
8.1	Framework structure	91	
8.2	Standby mode	92	
8.3	Channel description	93	
8.3.1	Service channel	93	
8.3.2	Measured value channel	94	
8.3.3	Arithmetic value channel	95	
8.3.4	Output channel	96	
8.3.5	1-channel parameters	98	
8.3.6	2-channel parameters	100	
8.4	Examples	104	
8.4.1	Reading from HYGROPHIL H	104	
8.4.2	Writing to HYGROPHIL H	105	

All rights reserved. Subject to change without prior notice.
No part of this document may be reproduced, processed or distributed in any form or by any means without the prior written permission of BARTEC BENKE.

Copyright © 2018 by
BARTEC BENKE
Schulstraße 30
D-94239 Gotteszell

Document / Version:	BA 060207	Softwareversion 1.042
Valid from / Author:	07.02.2006	G. Rothe
Revised at/ by:	19.02.2018	K. Hacker

1 System description

1.1 Task and fields of use

Task

HYGROPHIL® H 4230 is a measuring system for determining the amount of water vapour in air and other gases.
In many processes, monitoring and controlling gas humidity is a must if you want to achieve a consistently high product quality, use energy efficiently and adhere to the regulations regarding emission limits.
HYGROPHIL® H 4230 is a special measuring unit for measuring humidity under extreme measuring conditions such as:

- High measurement gas temperatures
- Gas humidity up to saturation
- Significant contamination in the form of dust, oil, grease, external gas and solvents, also in highly corrosive form.

Being a high-end device, HYGROPHIL® H 4230 is particularly suitable for continuous industrial use.
HYGROPHIL® H 4230 also makes it possible to measure humidity in processes during which this is otherwise not continuously possible or can only be done using laboratory methods, if at all.
HYGROPHIL® H 4230 uses a microprocessor to calculate all humidity-related variables in various scales and, in addition, to automatically monitor the unit itself. As a result, maintenance is minimized.

Fields of use

Thanks to its special features, HYGROPHIL® H 4230 can be used in places where other measuring systems fail due to unfavourable ambient conditions. Examples include:

- Flue gas measurement in power stations
- Flue gas measurement in incineration plants, even before filtering
- Fabric processing facilities
- Hot-air tunnels for preparing fast food
- Ovens
- Roasting facilities
- Copper extraction facilities, even subject to contamination by sulphuric acid
- All types of raw material dryers
- Sintering facilities for ores

The response rate of the measuring system guarantees that an appropriate closed-loop control can be operated in all application cases.

HYGROPHIL® H 4230-12 is explosion proof. It can be used in hazardous zone II area. To guarantee the explosion protection is the enclosure continual perfused by a scavenging gas. The scavenging gas flow is monitored and controlled.
The rinsing is intended for gases which have a higher density than the scavenging gas.

1.2 Measurement principle

HYGROPHIL® H 4230 works in accordance with the principle of psychrometric gas humidity measurement, measuring the difference in temperature between two measurement sensors. The difference in temperature results from the fact that one of the two temperature sensors is moistened. Heat is removed from it by means of evaporation. Using the difference between the „humid temperature“ and the „dry temperature“ it is possible to determine various humidity measurement variables precisely based on fixed mathematical relations. This measurement principle gives rise to a high degree of precision and reproducibility, corresponds to the secondary standard method in accordance with DIN 50012 and does not require any calibration. It is one of the most reliable methods used to measure gas humidity.
Usually, however, this measurement procedure is subject to limits if the gas temperature exceeds 100 °C or if the gas to be measured is impure. On a conventional type of humidity sensor, deposits have a detrimental effect on the evaporation rate and falsify the measurement result.
These limitations are eliminated in this measuring unit that has been further developed to form an „impact jet psychrometer“. The system can be used for an extended period of time without failure even at high temperatures and high humidity levels and for highly polluted or aggressive gases.

1.3 Structure of the humidity measurement system

The measuring chamber and electronics unit are accommodated in stainless steel enclosures flanged together, each with a door that can be opened separately.
The water tank is attached to the exterior of the enclosure.

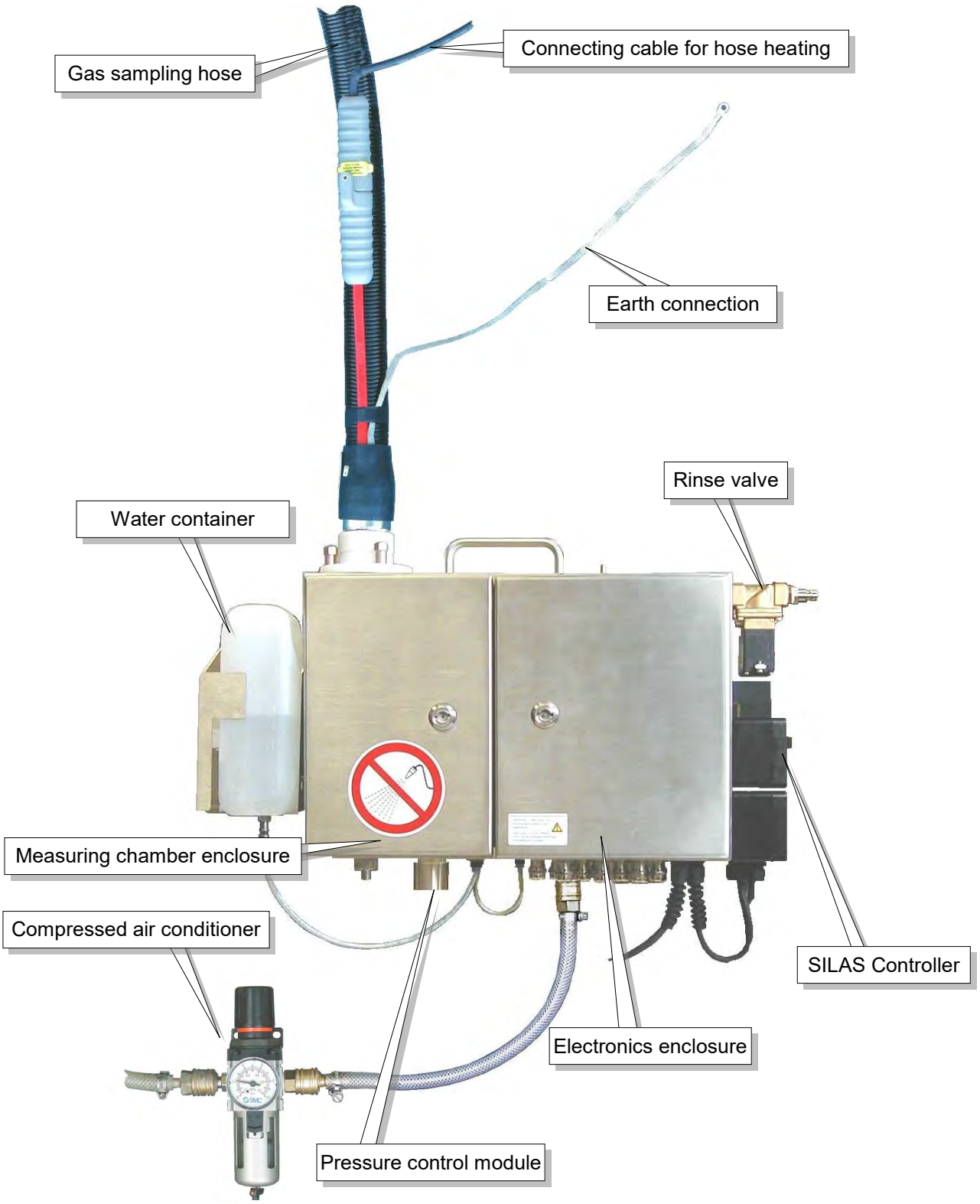
Gas sampling hose
Connecting cable for hose heating
Earth connection
Rinse valve
Water container
Measuring chamber enclosure
Compressed air conditioner
SILAS Controller
Electronics enclosure
Pressure control module

1.3.1 Measuring chamber

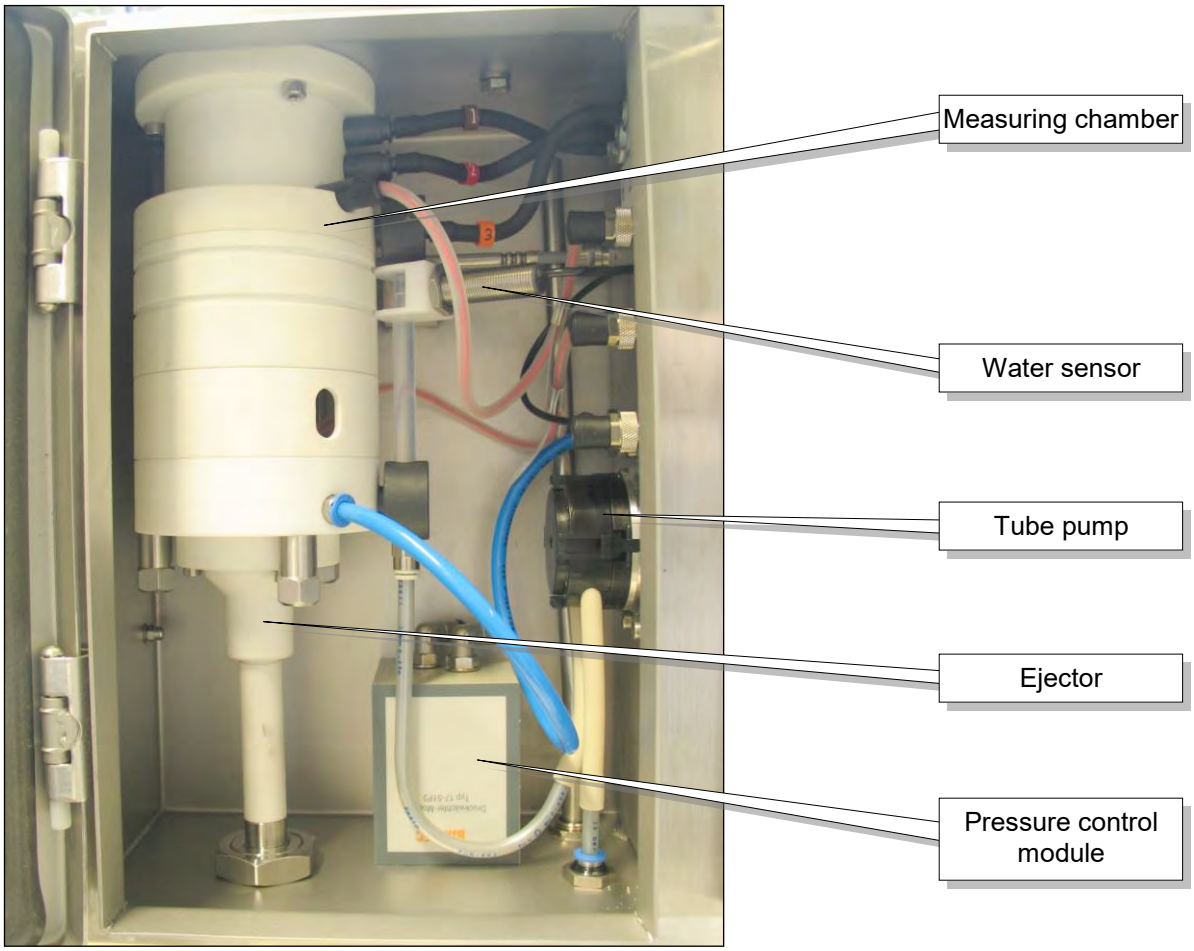

The venturi system and the water cylinder with the humidity sensors are accommodated in the measuring chamber.
To begin with, the air to be measured flows through a venturi nozzle, in which the gas flow rate is determined by measuring the difference in pressure. Located close to the nozzle is a sensor that measures the dry temperature. When it leaves the nozzle, the air takes the form of a laminar jet, referred to as the impact jet, and hits the water surface of the measuring cell. The sensor that measures the humid temperature (HT) is positioned at the centre of the measuring cell. The temperature values that are recorded are made available to the electronics unit and further processed there.
The measuring cell is constantly fed with water from the storage tank by a hose pump. The water level in the measuring cell is monitored by a sensor.
The pressure in the measuring chamber is likewise measured using a sensor. It is used to correct the measurement results and monitor the equipment. The measuring chamber is followed by the ejector. Currents of air are used here to create negative pressure in order to pump the measurement gas through the system. The pumping rate of the ejector is controlled using a proportional valve, with the help of the gas flow rate measurement in the venturi nozzle. As a result, the gas flow rate remains constant at around 14 l/min.
Excess water, together with the measurement gas and compressed drive air, is pumped out of the equipment via the ejector. It leaves the equipment through a connection at the bottom.

With the specification HYGROPHIL® H 4230-12 can the measuring gas be conveyed into the measuring chamber by using the present over-pressure. For this purpose a heatable pressure-reduction controller is to install before the gas sampling hose (see section 1.3.3).

1.3.2 Ejector

The lower section of the measuring chamber contains the ejector, an air jet pump that pumps the measurement air through the measuring chamber by means of compressed air. Negative pressure of up to -200 hPa is allowed at the extraction point. By controlling the compressed air that is fed, the gas flow rate is kept constant at 14 standard litres per minute. The actuator is a proportional valve controlled by pulse width modulation. The actual-value sensor is the venturi system in the upper section of the measuring chamber in connection with a differential-pressure sensor.

1.3.3 Pressure-reduction controller

If the over-pressure of the measuring gas shall be used to convey it into the measuring chamber, the heatable pressure-reduction controller with filter must be installed at the entry of the gas sampling hose
The controller must be adjusted to a pressure that guarantees a sufficient flow through the venturi nozzle. Ejector operating is to deactivate (software settings for operating with over-pressure see section 3.6).

1.3.4 Hose pump

The hose pump propels the water from the storage tank into the measuring cell. The pump’s delivery rate is regulated in such a way that part of the water flows out of the cylinder.

1.3.5 Water detector

The water detector uses a capacitive proximity switch to make sure that the water level in the measuring cell remains correct.

1.3.6 Pressure control module

To guarantee the explosion protection the enclosure is continual perfused by a scavenging gas (as a rule air or nitrogen). The Pressure control module regulates the flow to a defined mass of gas.

1.3.7 Rinse valve

The scavenging gas is fed via the rinse valve. The rinse valve is controlled by the SILAS-Controller.

1.3.8 SILAS-Controller

The SILAS-Controller controls the flow of the scavenging gas and monitors the pressure inside the enclosure during rinsing and operating mode, to make possible the use of HYGROPHIL H in hazardous zone II. An over-pressure must be kept in the enclosure to prevent the device from inflowing of hazardous gases.

The programmed settings of the SILAS-Controller are factory made (see table below). They guarantee a safe operating in hazardous zone II.

The switch S1 must be turned into position 1 to monitor the rinse function.

The settings for switch S2 are programmed as follows:

Pos.	Function	Display	
1	Pre-purge function	PRGYP2	
2	Pre-purging time	PT 3:00	[min:sec]
3	Pressure value P1	P1 1.0	[mbar]
4	Pressure value P2	P2 1.5	[mbar]
5	Pressure value P3	P3 15.0	[mbar]
6	Pressure value P4	P4 20.0	[mbar]
7	Function of Relays K3	K3 K2+	
8	Time Delay	DLY 30	[sec.]
9	Bypass	NORMAL	

The manual for the SILAS-controller is attached for further information.

1.3.9 Control and evaluation electronics

The signals for dry temperature, humid temperature, differential pressure and measuring chamber pressure are passed to the electronics unit, where a microprocessor is used to calculate the desired humidity measurement variables and monitor the equipment's functions.

The following measurement variables are recorded or calculated by the electronics unit and can be displayed and saved on the PC:

Variables measured

- Dry temperature TT
- Humid temperature HT
- Absolute pressure SP
- Differential pressure ΔP
- Auxiliary temperatures $T1_{external}$ (via ext. temperature sensor)
  $T_{internal}$ (for compensating HT)

Variables calculated

- Dew-point temperature DT
- Absolute humidity MH
- Specific humidity SH
- Volumetric water vapour content Vol%
- Partial water vapour pressure VP
- Enthalpy h
- Saturation deficit DVP
- Relative humidity for $T1_{external}$ RH

The following monitoring and control functions are carried out:

- Open-loop control of the proportional valve for regulating air flow rate
- Closed-loop control of the gas sampling hose temperature
- Monitoring and verification of
  - Water level internal, option: external
  - Air flow rate
  - Temperature sensors
  - Adherence to the measurement range at outlets
  - Gas sampling hose temperature
  - Plausibility of calculation results
  - RAM, ROM semiconductor memories
  - A/D converters

1.3.10 Controls and displays

When the enclosure door on the right is opened, the operator panel becomes accessible, together with its display, signal lamps and operating keys.

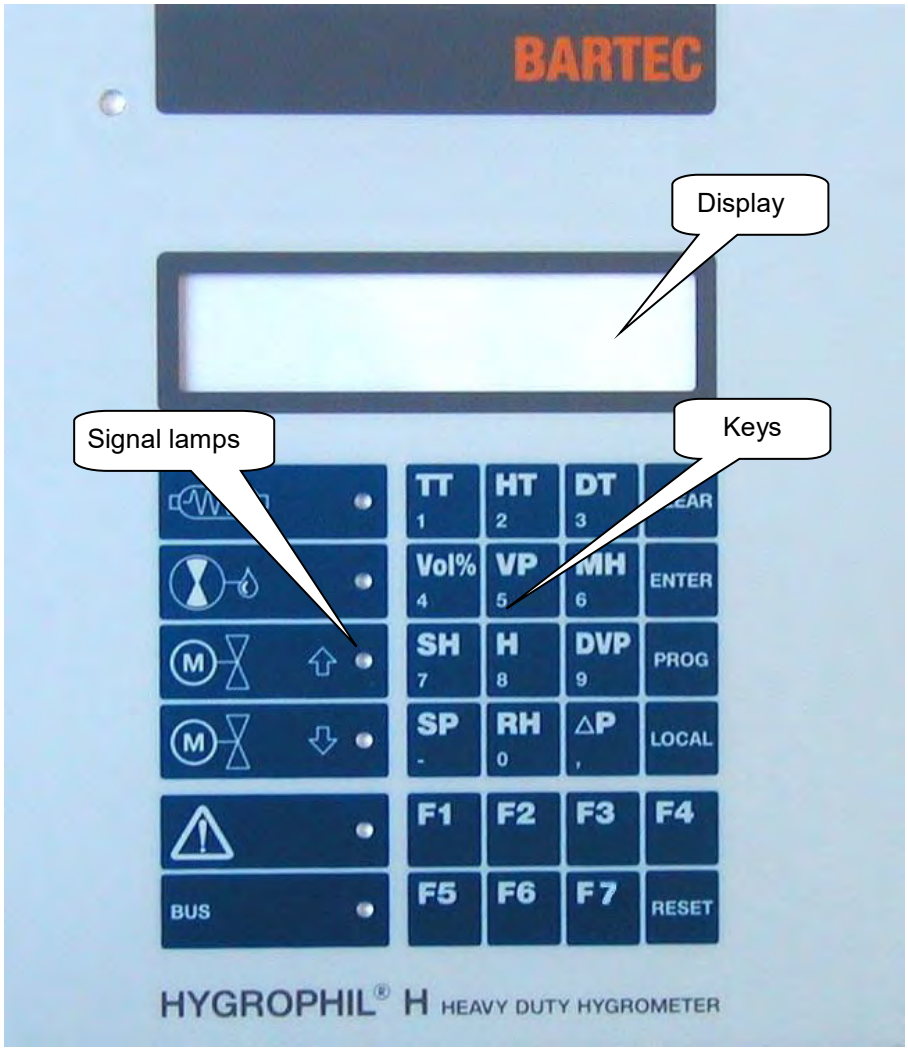

1.3.10.1 Keys

The measurement variables are displayed by simply pressing a key. The keys that can be pressed to display the measurement variables are labelled appropriately. Several keys are also assigned to numbers or other characters. This double assignment is needed in programming mode.

TT 1	Display of the dry temperature of the incoming gas (corresponds to the gas sampling hose temperature)
HT 2	Display of the humid temperature of the incoming gas
DT 3	Display of the dew-point temperature of the gas to be measured
VOL% 4	Display of the volumetric water vapour content
VP 5	Display of the current partial water vapour pressure of the gas to be measured
MH 6	Display of the absolute humidity of the gas to be measured
SH 7	Display of the specific humidity of the gas to be measured
H 8	Display of the enthalpy of the gas to be measured
DVP 9	Display of the saturation deficit of the gas to be measured
SP –	Display of the absolute pressure in the measuring chamber
RH 0	Display of the relative external humidity ($RH_{external}$) (only if $T1_{external}$ is defined)
ΔP ,	Display of the differential pressure (pressure difference in the venturi nozzle)

F1	Display of the temperature value of $T1_{external}$ (only if $T1_{external}$ is activated)
F2	Backlighting ON/OFF
F3	Display of the proportional valve regulation ratio
F4	Display of the internal temperature (T_{int})
F5	Standby (the pump speed is decreased by a factor of 10, while the setpoint value for the differential pressure is fixed)
F6	Key for changing the slave address and displaying the baud rate
F7	Test function for analogue outputs (former key F7)
CLEAR	Delete value in programming mode
ENTER	Confirmation key in programming mode
PROG	Start programming mode
LOCAL	Interrupt or continue bus operation
RESET	Trigger a software reset

1.3.10.2 Signal lamps

For the purpose of signalling various operating states, the panel contains six fields with symbols and a signal lamp for each.

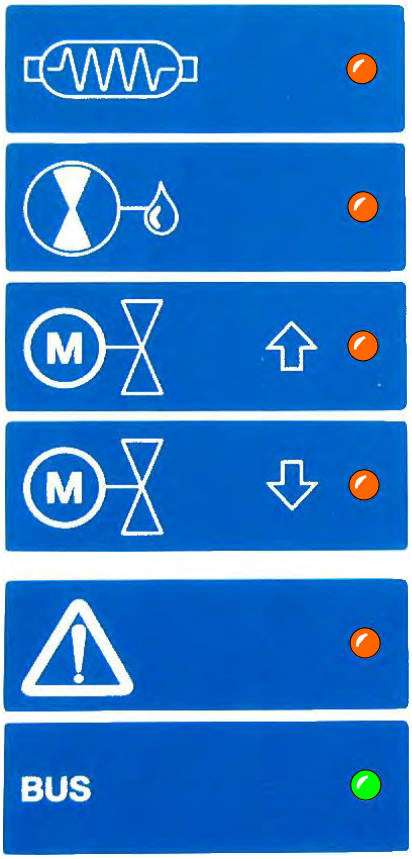

The heating (gas sampling hose) is switched on	(red)
The water pump is in operation	(red)
The proportional valve is opening	(red)
The proportional valve is closing	(red)
A warn- or error message is present	(red)
The PROFIBUS is exchanging data	(green)

1.3.10.3 Display

The display is made up of two rows and is backlit.
The measurement variables called using the keyboard are displayed together with their dimensions in the bottom line. The top line shows the operating status or error messages, depending on the current conditions.
During programming, the display is used for interaction with the user. Appropriate displays, messages and questions are displayed. The line at the top shows the menu that is open, while the line at the bottom shows the function to be programmed or a value to be changed.

1.3.11 Interfaces

Two analogue outputs

Two electrically isolated analogue current outputs are available for the purpose of evaluating and processing the measured values.
You can allocate any humidity measurement variables or auxiliary variables to these outputs as you wish.
You are free to define the limits of the measurement ranges within the respective overall measurement range as you wish (see section 5.2.1).

The analogue outputs are constantly monitored to ascertain whether the current measured value lies within the respective measurement range that has been programmed. If there are deviations, a fault is reported.
In addition, one of the two analogue current outputs can be monitored to ascertain whether it adheres to a minimum value and maximum value.
Once they have been switched on, the outputs remain at 0 until the normal operating conditions are reached.
If a fault is reported during measurement operation, the outputs are fixed at the value that they had directly before the fault report appeared.

Field bus interface

Field bus interface (PROFIBUS DP).
All measured values can also be recorded using the field bus interface. In addition, the system can be configured using this interface.

1.3.12 Temperature sensors

The internal temperature sensor, $T_{internal}$, is built into the enclosure as a fixed element.
It is used for compensating the humid temperature.
For measuring temperature-dependent humidity variables (such as relative humidity (RH) or enthalpy (h)), you have the option of installing an external temperature sensor ($T1_{external}$). This must be placed in the position where the humidity variable is to be measured.

1.3.13 Gas sampling hose

The gas humidity is not measured within the respective system. Rather, the gas is extracted from there and pumped to the HYGROPHIL system via a connecting line. It is essential that no water vapour condenses within the connecting line as this would falsify the measurement result and could possibly lead to operating problems. In order to prevent this, the temperature of this line (and of the entire suction apparatus) must be kept above the maximum dew-point temperature to be expected.
To this end, a gas sampling hose is used and its temperature is automatically kept constant. At the same time, the dry temperature sensor is used as the actual-value sensor. By programming the dry temperature (TT), therefore, you also specify the gas sampling hose temperature.

1.3.14 Connection for external water detector

An external water detector is available as an optional extra for monitoring the level in the water storage tank.

1.3.15 Filter

HYGROPHIL® H 4230 is highly insensitive to dirt. Under certain extreme operating conditions, however, it may make sense to use a filter in order to extend the maintenance interval for the measuring chamber.
If required, please ask our expert consultants to select a suitable filter.

1.4 Technical data

Humidity measurement				
Measurement principle	Psychrometric gas humidity measurement in line with the impact jet method			
Transducer	PT 100/ 4-conductor in accordance with DIN IEC 751			
Computational accuracy	≤ 0.01%			
Computing time	Approx. 2s			
Settling time	t_{90} = 90s (for sudden change in SH from 10 to 190 g/kg)			
Air/gas flow rate	Adjustable, max. 17,5 Nl/min			
Water intake	Max. 25 ml/h (hose pump)			
Water reserve	2l (enough for approx. 3 days)			
Compressed air intake	2...5 bar (max. air consumption 2000 Nl/h) -when operating without over-pressure-			
Measured variable inputs				
Measured variable	**Measurement range**	**Resolution**	**Accuracy**	**Type**
Dry temperature TT	0...140 °C	0.1 °C	≤ 0.5% of the measurement range	Primary
Humid temperature HT	0...140 °C			
Temperature $T1_{external}$ (optional)	0...200 °C			
Absolute pressure SP	500...1500 hPa	1 hPa	≤ 1%	
Dew-point temperature DT	20...100 °C	0.1 °C		Calculated
Volumetric content H_2OVol%	2...100 %	0.1 %		
Absolute humidity MH	15...1000 g/kg	1 g/kg		
Specific humidity SH	15...1000 g/kg	1 g/kg		
Enthalpy h	35...1000 kJ/kg	1 kJ/kg		
Current vapour pressure VP	10...1000 hPa	1 hPa		
Saturation deficitDVP	0...1000 hPa	1 hPa		
Outputs				
Signal output				
Analogue output	2 electrically isolated output channels, can be assigned to each of the measurement ranges, spread, error behaviour programmable			
Output signal	0…20 mA or 4…20 mA (programmable), linear			
Permissible load	≤ 500 Ω			
Accuracy	≤ 0.2% of the associated measured value			
Inputs				
External water detector	24 V d.c., NPN			
$T1_{external}$	PT 100/ 4-conductor in accordance with DIN IEC 751			
Data interface				
Field bus interface	PROFIBUS DP			
Electrical data				
Auxiliary power	Measuring unit:	90…264 V a.c., 47...63 Hz, approx. 30 VA		
	Gas sampling hose:	230 V or 115 V a.c.; approx. 100 VA/m		
Relay				
Warning relay	Display of warnings	Load: 1 A/24 V d.c., at least 10 mA		
ERROR relay	Display of failures	Load: 1 A/24 V d.c., at least 10 mA		
Ambient conditions				
Permitted working temperature	+5...+50 °C			
Permitted storage temperature	-20...+70 °C (without water)			
Climate category	KWF in accordance with DIN 40040			
Reference conditions	23 °C ±2 °C / 230V ± 2%			

Mechanical data	
Enclosure	Stainless steel enclosure; protection rating IP64 in accordance with DIN 40050
Dimensions	450×410×150 mm (without mount)
Assembly drill holes	347x330 mm, 4×∅7x13mm (M6)
Weight	Approx. 12.5 kg
Connections	
Electrical connection	Screw terminals 0.5-1.5 mm^2; cable feed via M 16x1.5 cable gland
Compressed air connection	G 1/4"
Gas sampling hose connection	G 3/8" (IP54) Universal conical nipple DKR DIN3863
Dimensions	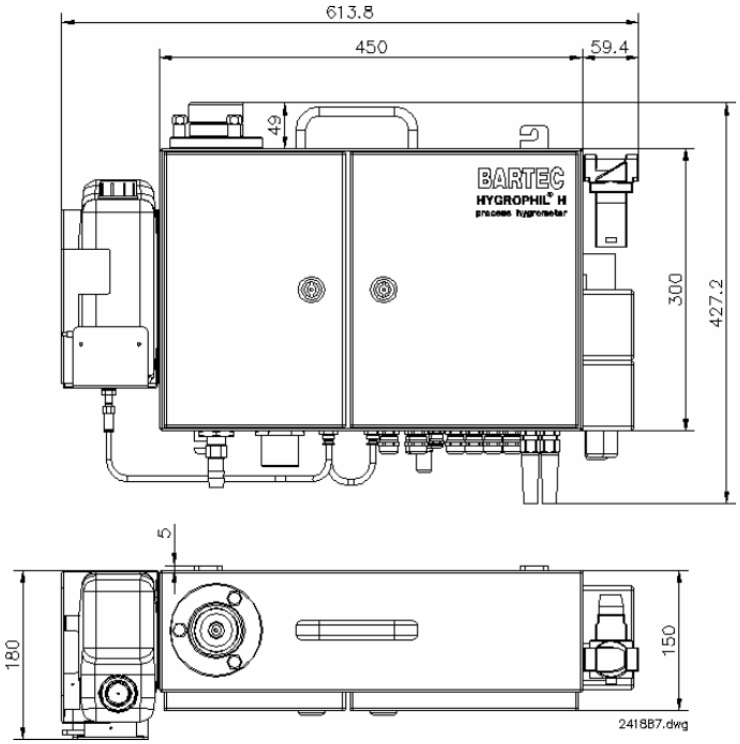
Assembly drill holes	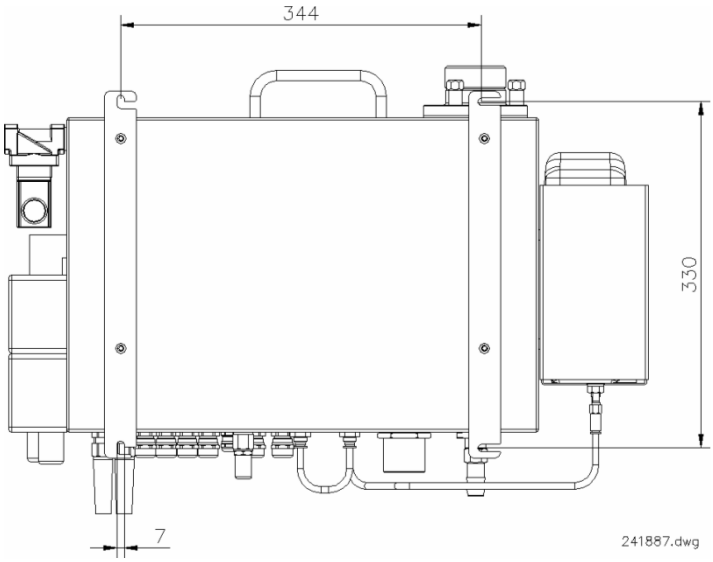

1.5 Details when ordering

1.5.1 Basic equipment

HYGROPHIL H 4230-10
Corrosion-proof, 115/230 V a.c.
Scope of delivery: HYGROPHIL-H in accordance with order number,
incl. compressed air conditioner, Type 4220-30 and 1 litre of surfactant

Order number: 241887

1.5.2 Accessories

Measurement gas tube, Type 4230-114
Flexible, water-resistant heating tube for feeding measurement gas without condensate
(max. input temperature 200 °C)
Including 12 mounts
Operating voltage: 230 V a.c. or 115 V a.c.
Connection type: Universal conical nipple G3/8” DKR DIN3863

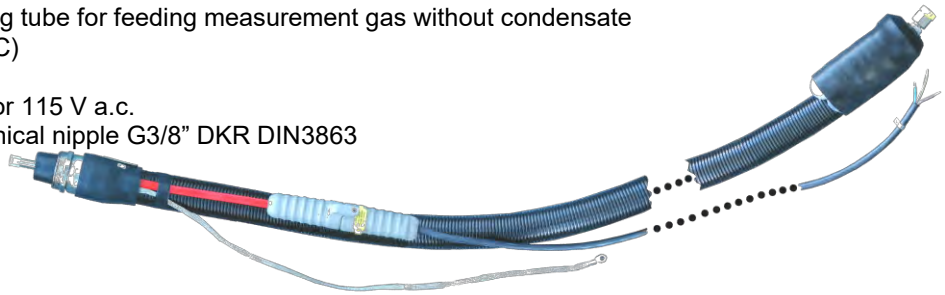

Order number: Length 12 m 241974 Order number for 115 V version on request (230 V)

Water container 11l , Type 4230-102

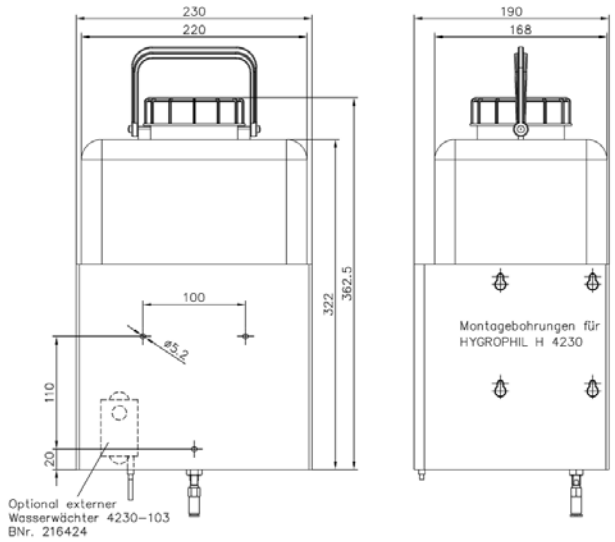

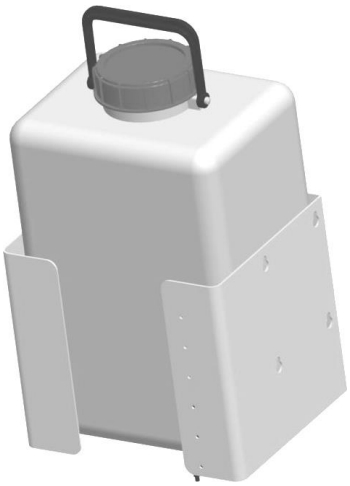

Order number: 216420

Water sensor external, Type 4230-103
For monitoring the fill level in the water storage tank

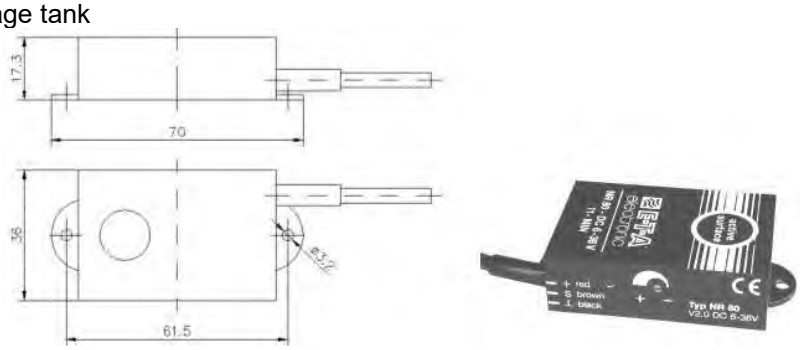

Order number: 216424

Adapter for gas sampling hose, Type 4230-00-044
(DKR-3/8“ to NPT-1/4“)

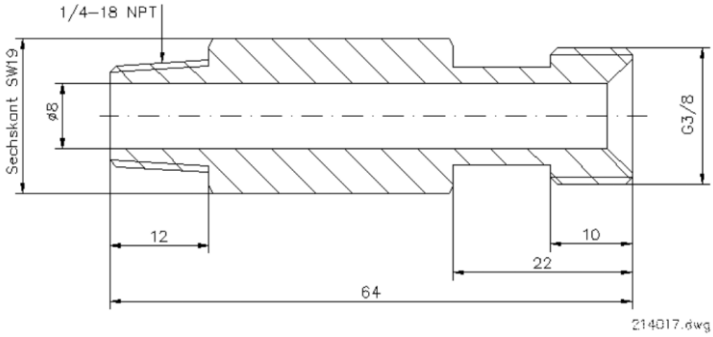

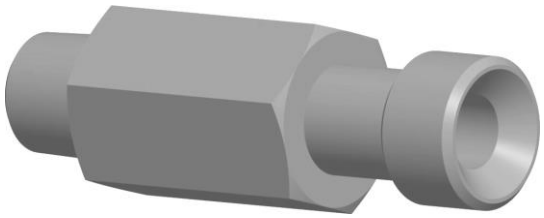

Order number: 214017

Adapter for gas sampling hose, Type 4230-00-046
(DKR-3/8“ to 8 mm Swagelok)

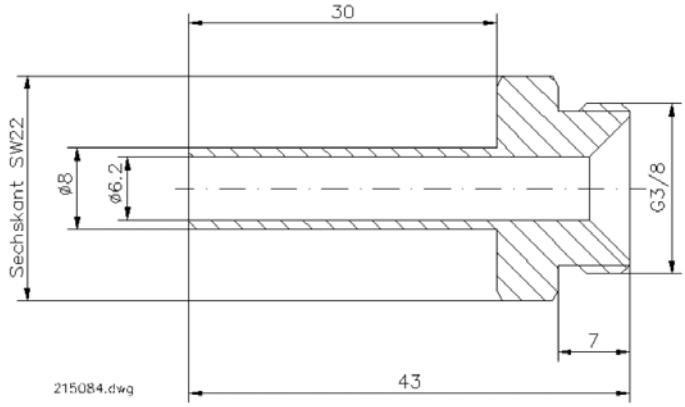

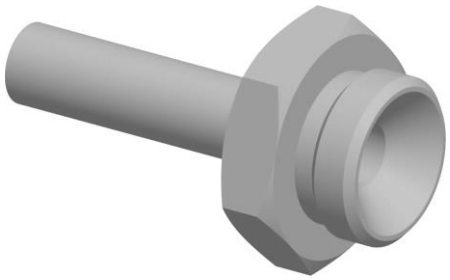

Order number: 215084

Standard filter, Type 4220-100
Including filter cartridge 150-µm
CrNi Steel
1.4404

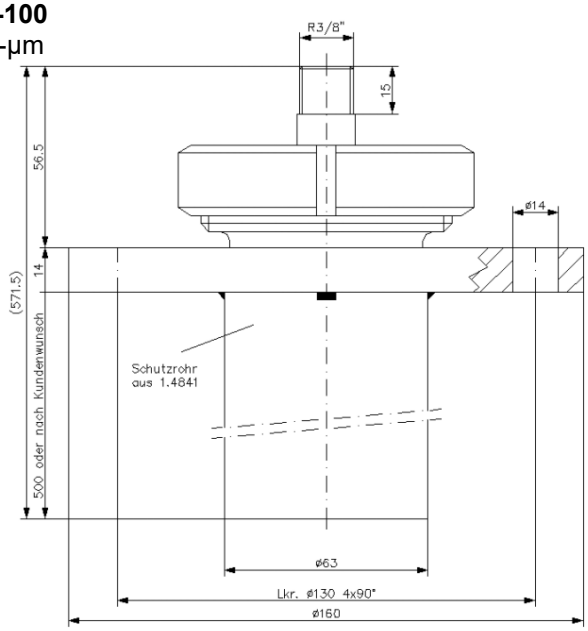

Order number: 208686

Gas sampling sensor Type SP 2000 GF 150

Order number: 214334

Sampling pipe for Gas sampling sensor Type SP 2000/SS

Order number: 214333

Adapter for gas sampling hose 4220 to 4230, Type 4230-101

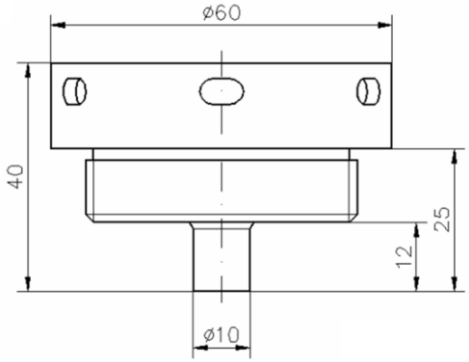

Order number: 216421

Wall holder, Type 4220-36

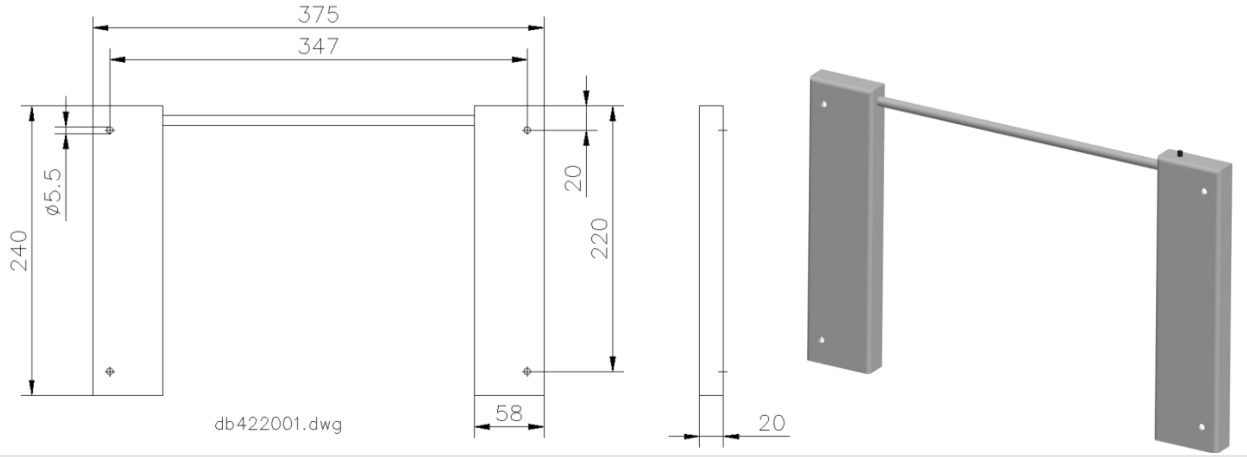

Order number: U 3401422036

Stand holder, Type 4220-35

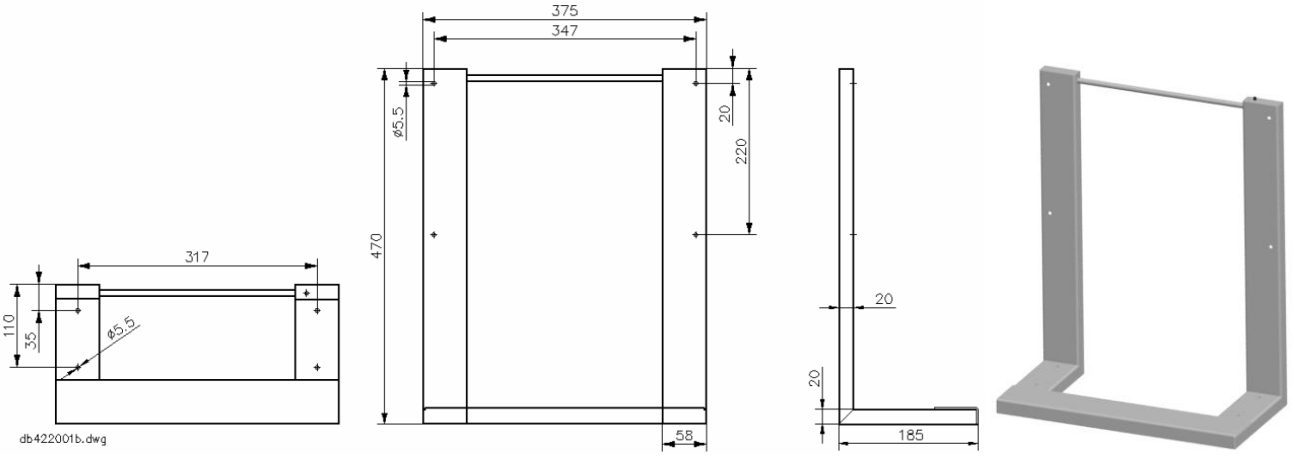

Order number: U 3401422035

Pressure reduction controller with filter, Type 4230-118

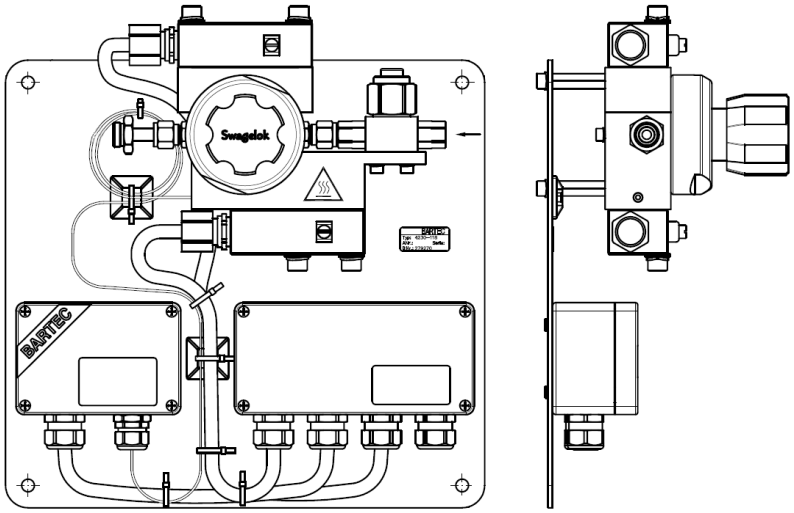

Order number: 279270

1.5.3 Spare parts

Tube pump cartridge, Type 4230-104

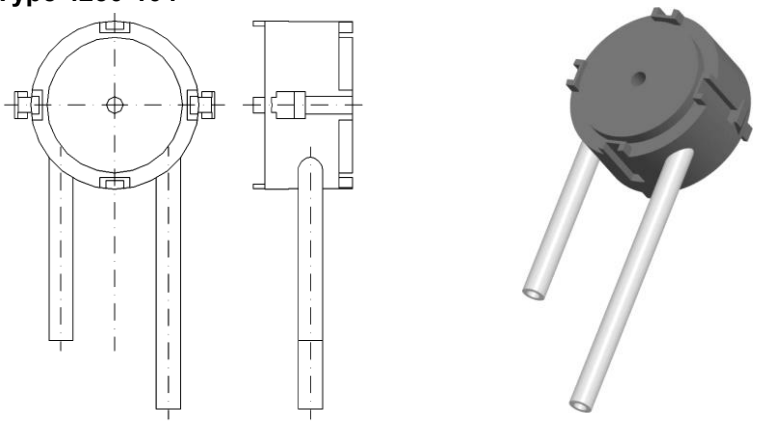

Order number: 216422

Measuring chamber with ejector, Type 4230-301
Without probes

Order number: 202383

Water sensor, Type 4230-302
For monitoring the fill level in the measuring cell

Order number: 202823

Pump motor, Type 4230-303

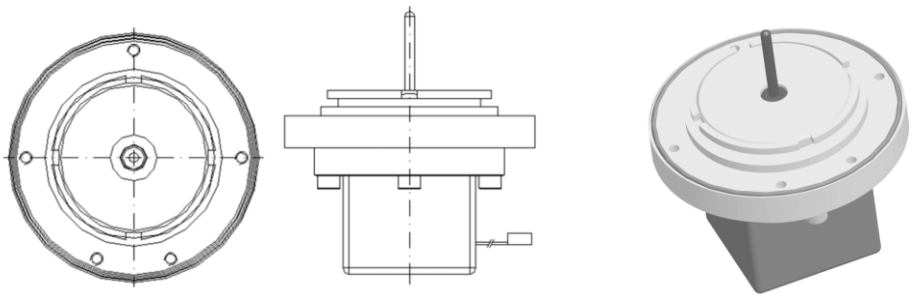

Order number: 202409

Probe TT, Type 4230-304

Order number: 202411

Probe HT, Type 4230-305

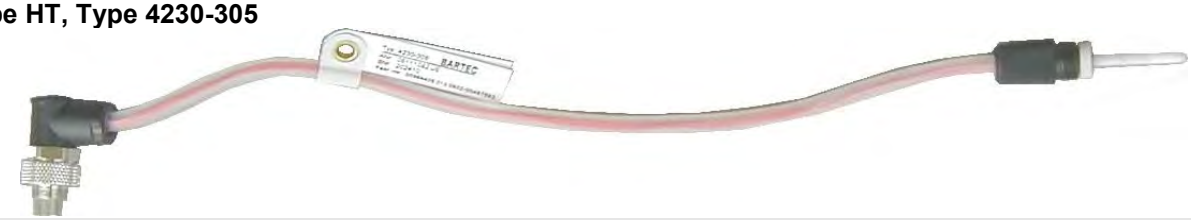

Order number: 202410

Proportional valve, Type 4230-308

Order number: 202781

Display-/PROFIBUS board, Type 4230-401

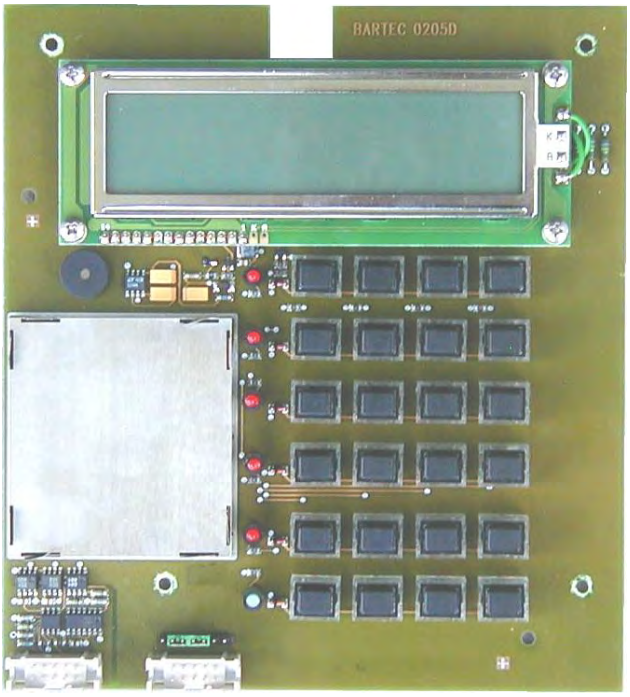

Order number: 214369

Electronics board with power supply unit, Type 4230-400

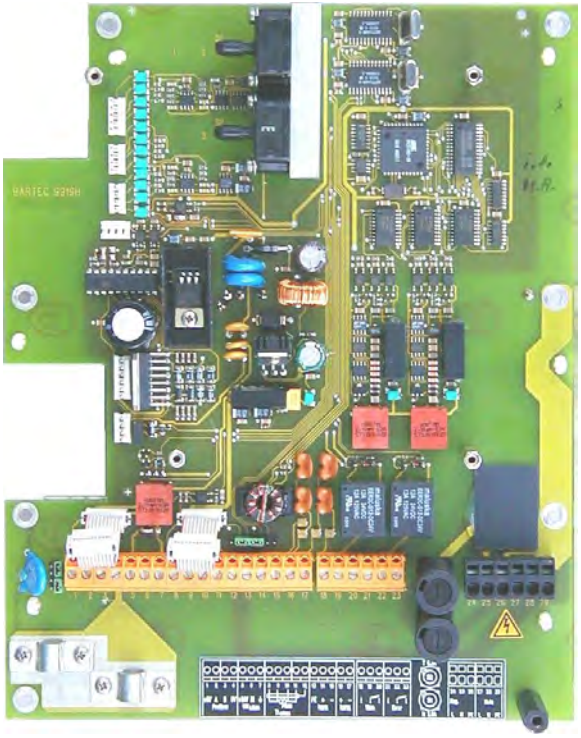

Order number: 214369

Spare filter for standard filter Type 4220-106
150 µm, Cr-Ni steel 1.4404

Order number: U 116006

Replacement filter Type GF 150
for Gas sampling sensor SP 2000
0,1 µm

Order number: 220232

Compressed air conditioner Type 4220-30
With compressed air regulator and filter

Order number: U 3401422030

Replacement filter for pressure reduction controller

Order number: 280964

1.5.4 Individual parts for measuring chamber

Level indicator incl. gasket
Type 4230-106

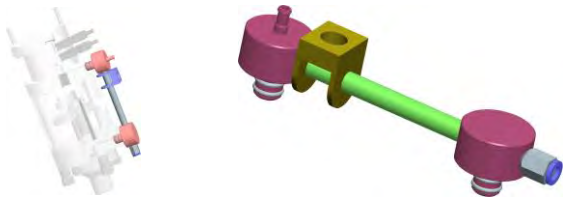

Order number: 232482

Measuring cell incl. water connection incl. gaskets
Type 4230-107

Order number: 232483

The measuring cell type 4230-107 is no longer delivered. It will be replaced by the further developed measuring cell type 4230-115 resp. 4230-116 combined with the water connection nipple type 4230-117

Water connection nipple for measuring cell
Type 4230-117

Order number: 278353

Measuring cell completely, with ceramic ring
(without water connection nipple)
Type 4230-115

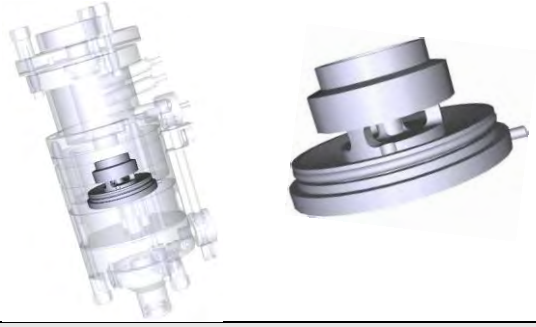

Order number: 278350

Special model
for applications in aggressive media:

Measuring cell completely, with Teflon ring
(without water connection nipple)
Type 4230-116

Order number: 278351

Nipple for pressure difference connection
Type 4230-108
(2 pc in the kit, incl. gaskets)

Order number: 232481

Nipple for ejector
Type 4230-109
(2 pc in the kit, incl. gaskets)

Order number: 232459

O-ring D50,0x2,5
Viton, (2 pc per meas. chamber necessary)

Order number: 202472

Measuring chamber ring
chart no. 4230-00-007

Order number: 202353

Inlet strainer incl. gasket Type 4230-110 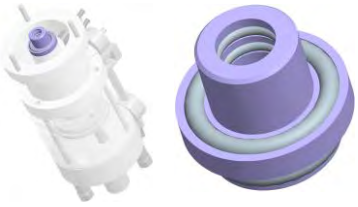	**escape ejector** chart no. 4230-00-054
Order number: 232458	Order number: 222563

Nut M5 for measuring chamber or cap fastener (2x3 pc per meas. chamber necessary) 	**Measuring cell-bracket incl. ejector** **Type 4230-111** 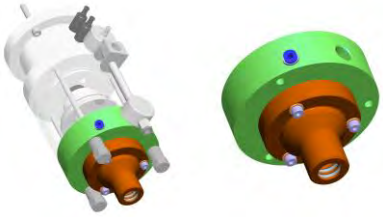
Order number: 202370	Order number: 232457

1.5.5 Consumables

Tenside 1l, PE bottle
Order number: U04014220201

2 Safety precautions

HYGROPHIL units are produced in line with regulations currently in force and only leave the factory following thorough safety tests to ensure that they are in perfect condition. Please follow the instructions provided with regard to installing and operating the equipment.

2.1 General information

- Please read the operating instructions prior to installing and starting up the equipment. Should you have any questions or difficulties, please contact our service staff.
- Provide your operating and maintenance staff with detailed instructions and provide them with all the information they need.
- The equipment's internal self-monitoring systems and fault reports do not replace the safety facilities in the overall system into which the unit is integrated.
- Make sure that all regulations relating to the operation of your system are observed.
- Warning symbols at different places of the device draw your attention to dangers:

Attention, general place of danger!

Danger, voltage!

Danger, hot surface!

- Open the enclosure door only if there is no explosive atmosphere is present.
- Switch the device off an wait at least 5 minutes for cooling down before opening the enclosure!

2.2 Equipment-specific instructions

- The equipment must be installed and maintained by qualified technical personnel.
- Make sure that the data and operating conditions specified by BARTEC are observed.
- HYGROPHIL® H 4230 is not suitable for measuring humidity in explosive mixtures of gas for which there are special safety regulations.
- The equipment must not be operated in the open air or anywhere subject to frost unless special measures are taken.
- Measurement gas that leaves the bottom of the equipment and overflow water may contain hazardous substances from the process. Dispose of these substances in accordance with the relevant regulations.
- Always disconnect the equipment from the power supply before opening it.

- The gas sampling hose may also get hot on the outside. Do not touch the hot gas sampling hose! In order to warn you that the surface is hot, an appropriate warning symbol is attached to the gas sampling hose.

2.3 Installation location

- When installing the equipment, make sure that you observe the permissible climatic and temperature conditions in line with the technical data.
- If exceptional conditions exist at the installation location, suitable measures must be taken to protect the equipment. Please look at the accessories we offer with respect to this.
- Install the equipment in a location that is not subject to vibrations.
- Do not choose a location near any equipment that generates electromagnetic fields (transformers, motors, power lines, magnets, semiconductor actuators, high-frequency generators and the like).
- Use original suppressor accessories to suppress interference contactor relays located nearby.
- Fix the equipment securely even for mobile use.
  The equipment must never be operated without being fixed securely. There would be a risk of it falling over!

2.4 Electrical connection

- Before connecting the equipment, check whether the rated voltage specified on the rating plate corresponds to that available at the installation location.
- Wiring must be carried out exclusively by specialists who are familiar with the valid local rules for setting up power installations rated for up to 1000 volts.
- The equipment must be connected to the power supply in line with the specifications in these operating instructions (see section 3.3). Make sure that you observe the relevant national regulations and the local provisions of the utility supplying the power.
- Use only shielded cables for sensor and signal lines. In order to avoid possible earth currents, the shield must be connected on just one side (to the equipment).
- Lay sensor and signal lines at a sufficient distance from live lines, in separate cable ducts wherever possible.
- All cables that are used must be selected in accordance with DIN/VDE or the relevant national regulations.
- Do not disconnect the yellow/green protective earth conductors or those labelled „PE“ at any point.
- Wire all power consumers within a complex system, including the protective earth conductors, in a star connection. Avoid sequential wiring.
- Under no circumstances use the HYGROPHIL unit’s supply terminals as a terminal for other loads.
- In the case of interference-prone power supplies (thyristor controllers, frequent switching of large loads, HF generators), we recommend connecting an isolating transformer or mains filter on line side.
- Install an all-pole switch near the equipment to switch the equipment on and off.
- If there are several units in one system, each should be protected separately against short circuits and equipped with a disconnector of its own.
- The protection conductor of the explosion-proof gas sampling hose must be connected to the potential equalization on site.

2.5 Operating the equipment

- Fluctuations in the mains voltage are only permissible within the scope of the values specified in the technical data. If the equipment is operated under exceptional conditions, voltage regulators must be used. Our Service department will be pleased to provide you with advice in this regard.
- If any irregularities arise, make a note of the error messages displayed and attempt to rectify the fault using the list provided in chapter 7. If you are unable to rectify the fault, please switch off the equipment (first the mains voltage then the compressed air).
- If you discover any signs of damage or destruction to any parts of the equipment or if safe operation of the equipment cannot be guaranteed for any other reason, do not start up the equipment or, if already in operation, shut it down immediately.
  Notify the local service centre.
  Make sure that the equipment cannot be switched on again until the damage has been remedied.
- Contact our service specialists if you discover any faults or defects during operation or if you have cause to doubt whether the equipment is working properly.

Disclaimer of liability

BARTEC GmbH and its vicarious agents only assume liability in the case of deliberate acts or gross negligence. The extent of liability in such a case is limited to the value of the order placed with BARTEC GmbH.
BARTEC accepts no liability for any damage resulting from non-observance of the safety regulations or from non-compliance with the operating instructions or operating conditions. Secondary damage is excluded from the liability.

3 Installation

Depending on the local circumstances and purpose of use, HYGROPHIL® H 4230 can be installed as either a stationary unit (wall mounting) or a mobile unit.
The entire installation must be carried out by a specialist, taking into account and observing the regulations stipulated in DIN/VDE 100 and the relevant national provisions for setting up power installations rated for up to 1000 volts.

Select a solid, vibration-free, vertical surface for installing the equipment. In addition, the installation location should be easily accessible for maintenance and cleaning work and should be illuminated.

Comply with this procedure wherever possible when installing the equipment:

1. Mechanical installation
2. Connect sensors where appropriate
3. Connect outputs
4. Mount gas sampling hose
5. Pressure reduction regulator (if operated with over-pressure)
6. Mount filter (if necessary)
7. Prepare compressed air connection
8. Connect to the mains
9. Fill water storage tank

3.1 Wall mounting

- Select an installation location and drill the four mounting holes in line with the specifications in the diagram.
- Fix four screws in the holes.
- Attach the two fixation bars to the rear of the device.

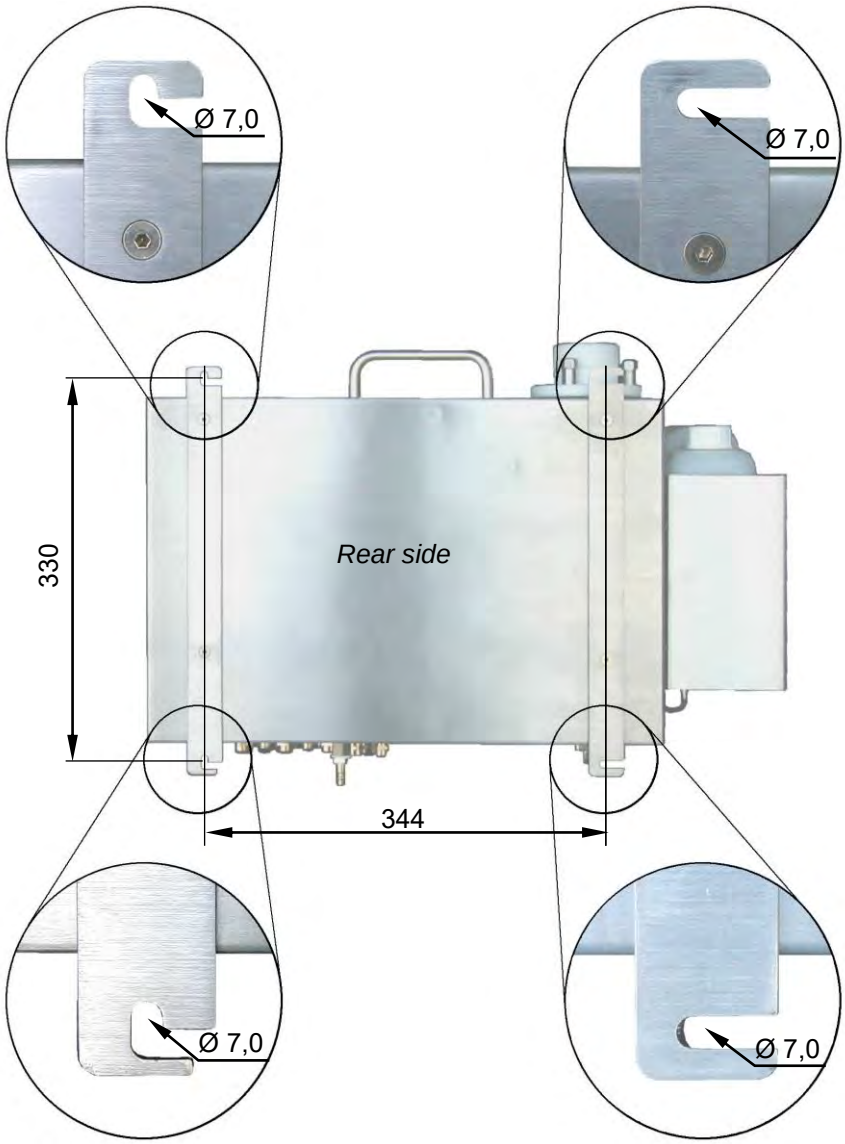

- Hook the device into the four screws.

Make sure that the equipment is aligned vertically. This is important in order for it to function properly!

Please observe the load-carrying capacity of the wall. Depending on the water reserve, the equipment can weigh up to 23 kg!

Using the wall mount

Instead of the fixation bars you can just as well fix the device by using the wall holder type 4220-36 (see section 1.5.2 Accessories).

- Attach the wall mount firmly to the wall. Please pay attention to the weight of the equipment (up to 23 kg depending on the water reserve).
- Insert the cross-strut into the wall mount.
- Unscrew the two mounting struts from the rear panel of the equipment.
- Screw suitable clips for hanging the equipment into the two upper drill holes.
- Use the clips to hang the equipment onto the cross-strut of the wall mount.
- You can correct the horizontal alignment using the adjusting screw on the cross-strut.

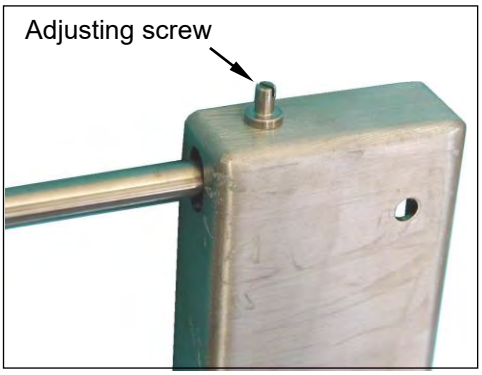

3.2 Mobile use

If the equipment is not to be installed for stationary use, you can fix it to the stand holder type 4220-35 (see section 1.5.2 Accessories).

- Place the unit on its front side.
- Unscrew the two mounting struts from the rear panel of the equipment.
- Screw the stand/wall mount firmly to the rear panel of the enclosure using the four M 5 x 12 hexagonal socket-head screws that are supplied together with the stand/wall mount. Do not use the countersunk head screws of the mounting struts for this.
- Select a solid, vibration-free, horizontal and flat location for setting up the equipment.
- Align the equipment using a spirit level.
- Make sure that the equipment cannot fall over!

The equipment must be fixed securely even for mobile use. The equipment must never be operated without being fixed. It would otherwise be in danger of falling over!

You can use the stand holder type 4220-35 to fix device to the wall in the same way as the wall holder type 4220-36.

3.3 Connection instructions

3.3.1 Assignment of terminals

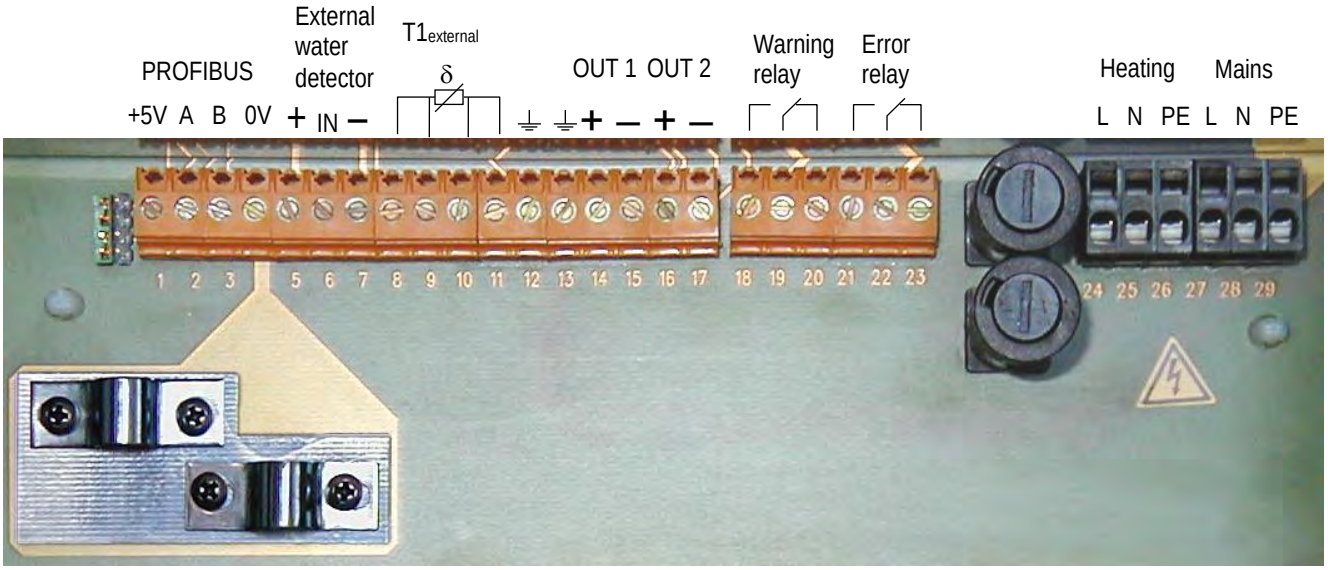

3.3.2 Mains connection

- Wiring must be carried out exclusively by specialists who are familiar with the valid local regulations for setting up power installation rated for up to 1000 volts.
- Check whether the voltage of the mains corresponds to that on the rating plates of the equipment and gas sampling hose.
- All cables that are used must be selected in accordance with DIN/VDE or the relevant national regulations.
- Install an all-pole switch near the equipment to switch the equipment on and off.
- Run the mains cable through the (anti-kink) cable gland on the right.
- Connect the mains voltage cable to terminals 27 (L), 28 (N) and 29 (PE).
- Do not disconnect the yellow/green protective earth conductors or those labelled „PE“ at any point.
- Wire all power consumers within a complex system, including the protective earth conductors, in a star connection. Avoid sequential wiring.
- Under no circumstances use the unit’s supply terminals as a terminal for other loads.
- In the case of interference-prone power supplies, it is a good idea to connect an isolating transformer on line side, and also a mains filter if required.
- If there are several units in one system, each must be protected separately against short circuits and equipped with a disconnector.
- When the work is finished, tighten the threaded joints on the cable glands. This ensures that the degree of protection is observed and provides strain relief.
- Check that the protective earth conductor is connected correctly.

3.3.3 Temperature sensors

- Only PT 100 resistance sensors are suitable as sensors (electric resistance 100 Ω at 0 °C).
- Use a 4-strand shielded cable for the connection.
- Connect the shield on just one side of the terminals provided in order to avoid earth currents on the measuring unit.

The accuracy specified in the technical data is only achieved with a 4-conductor connection. Starting from the sensor, run each of the two sensor connections with 2 strands up to the unit's terminal connection.

2-conductor connection

A 2-conductor connection can also be used if necessary. In this case, the two terminals on the right and the two on the left must be short-circuited to create one pole on the terminal strip.

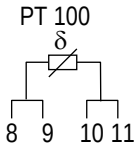

Using a 2-conductor connection reduces the measurement accuracy because the supply conductor resistance is not compensated automatically.

3.3.4 Analogue outputs

If you wish to use one or both analogue measured value outputs, you must observe the following instructions.

- Connect the shield on just one side – either to the terminals in the measuring unit or to the secondary unit – in order to avoid earth currents.
- Observe the maximum loop resistance of 500 Ω.

3.3.5 Warning- / ERROR contact

The Warning/ERROR contact is closed during normal operation and opens when faults occur.
The Warning/ERROR contact can be used for tasks such as connecting external signalling devices or controls.

3.3.6 PROFIBUS

- Run the PROFIBUS cable through the two cable glands on the left.
- Connect the PROFIBUS cable to terminals 2 (PROFIBUS A) and 3 (PROFIBUS B).

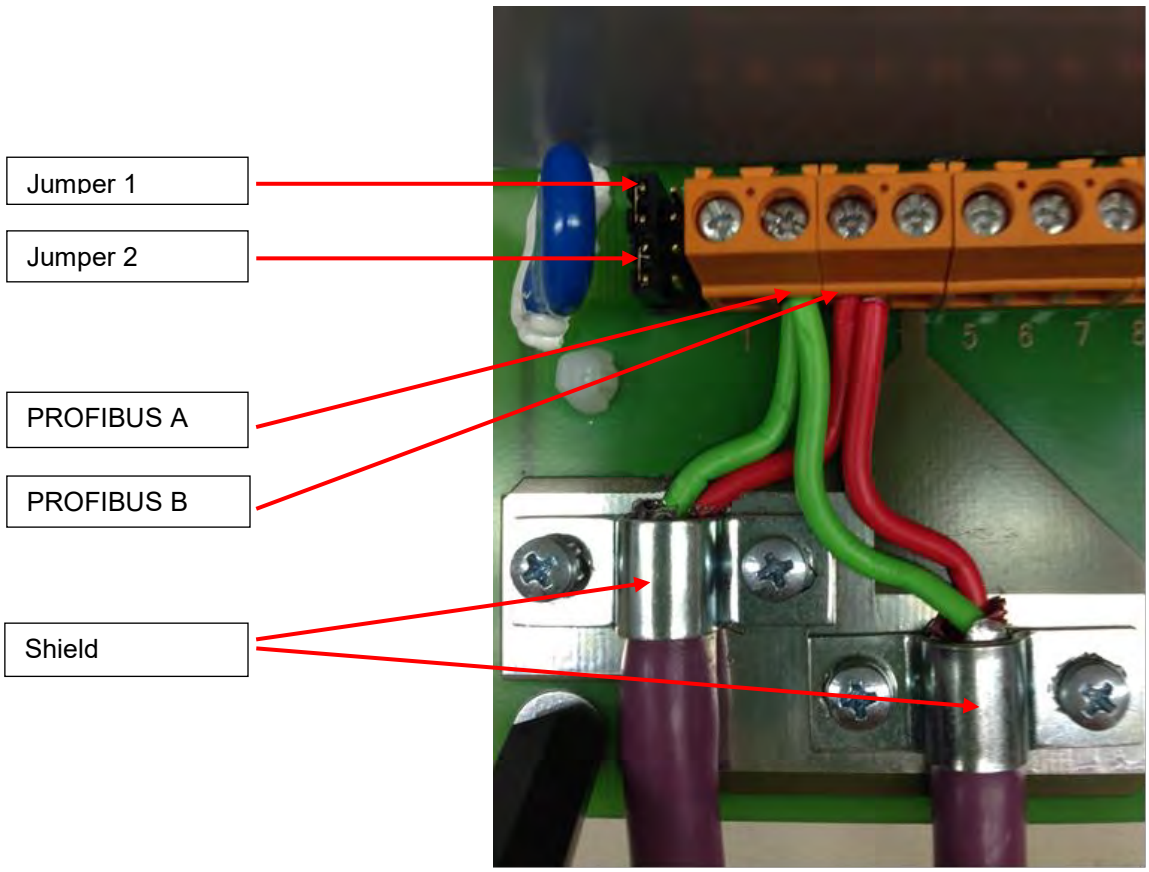

If the unit is the last user in the PROFIBUS, the two jumpers must be closed.

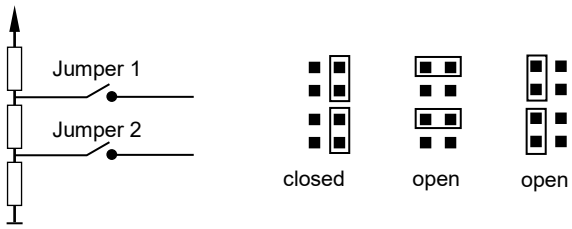

3.4 Mounting the gas sampling hose

In order for the HYGROPHIL unit to be operated, it is vital that the gas sampling hose is mounted precisely. You should therefore observe the following instructions.

Before mounting the gas sampling hose, make sure that it is designed for the same voltage as the unit. Please note that the gas sampling hose consumes 100 W of power per meter. Without additional measures, the maximum length for the gas sampling hose is 12 m at 230 V and 6 m at 115 V!

3.4.1 Mounting instructions

No condensed water can be collected during normal operation of the unit if it has been installed and programmed correctly. However, there is a risk of condensed water being formed during operating breaks and in the case of irregular operating states (compressed air or heating switched off).
You should therefore position the gas sampling hose in such a way that no condensed water is able to gather in a sagging arc to form a 'water sack' that blocks the flow of air.
Even when the compressed air is switched on again later, this alone will not be enough to remove such a water sack, making manual intervention necessary.
The hose should run either at a slant from the extraction point to the measuring unit or upwards in the form of an arc.
Any condensed water that is formed should be able to flow either to the measuring unit or to the extraction point. You must check whether condensed water is allowed to flow back to the extraction point.
If condensed water runs into the HYGROPHIL® H 4230 unit, temporary faults in the measured values may result. This must be noted in the case of connected closed-loop controls. The HYGROPHIL® H 4230 measuring unit will not be damaged.

During mounting, make sure that the bending radius for the gas sampling hose does not fall below the smallest permissible value of 160 mm.

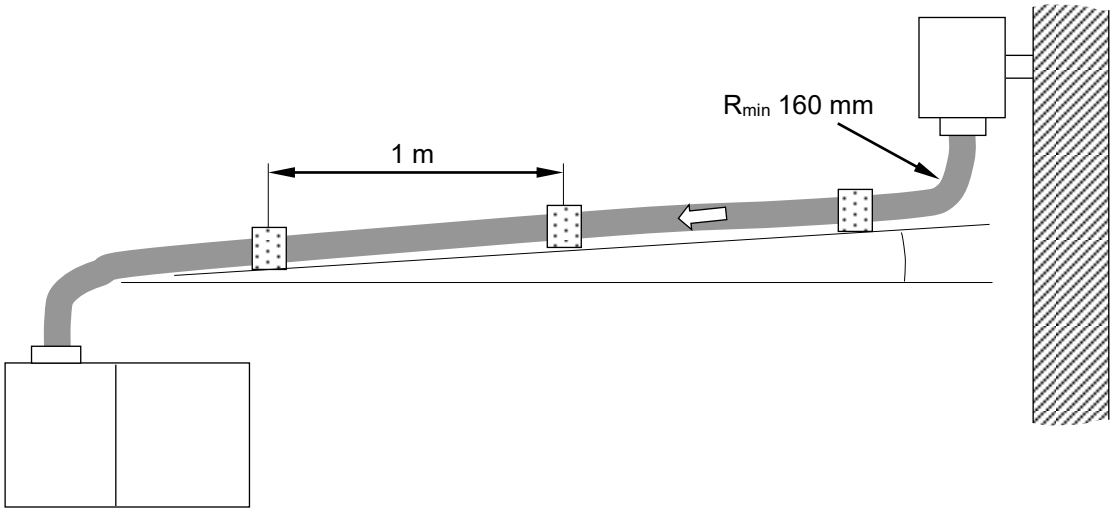

Please also observe the following instructions with regard to positioning the gas sampling hose.
Handling the gas sampling hose properly plays a key role in ensuring that it remains fully intact for longer.

	wrong	right
Avoid buckling and bending stress! Use saddles or rolls with an appropriate diameter.	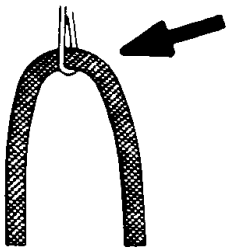	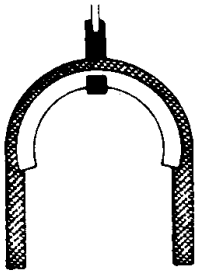
Avoid compressing or stretching the hose. Use elbows at the connections.	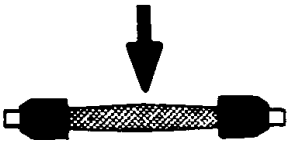	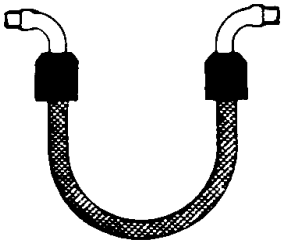
Avoid torsional movements during mounting. Make sure that the axes of the hose run parallel and that the hose is not twisted.	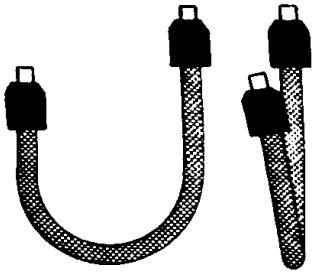	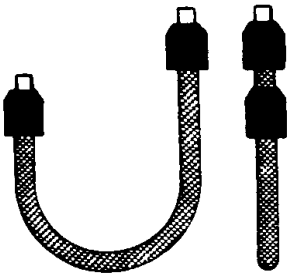
Do not pull rolled hoses apart. Unroll the hose.	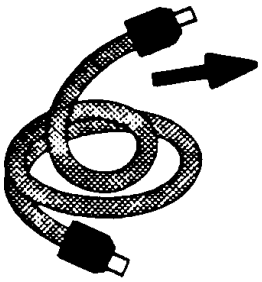	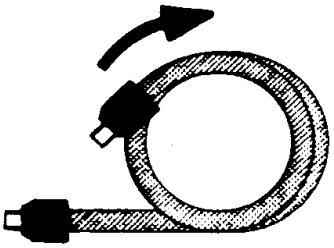
If hoses are too short, kinks may occur at connection points. Allow for a straight piece at the ends of connections (approx. 5x the hose diameter).	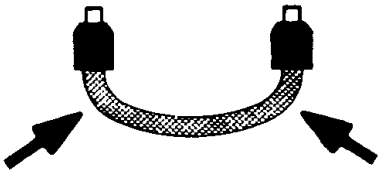	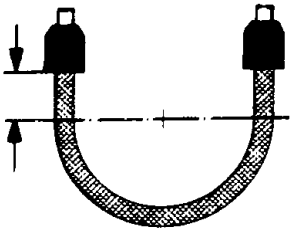
Avoid letting the hose hang from the connections. Use supports or rolls.	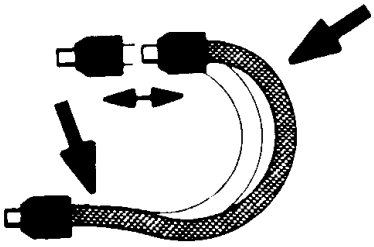	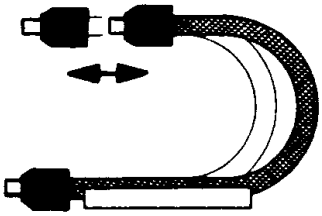

3.4.2 Mounting sequence

- Screw the M 48 plastic knurled nut to the gas sampling hose mounting nut on the unit (A/F 47).
- Push the gas sampling hose stub carefully into the opening on the top of the unit.
- Then screw the gas sampling hose tight by turning the plastic knurled nut (with the screw-in gas sampling hose mounting nut (A/F 47) clockwise.

The measurement gas feed must be completely leak-proof along its entire length. Even small quantities of leakage air cause substantial measurement errors!

If the gas sampling hose has a length of more than 1 m, its weight must be supported by one or more additional attachments. Without additional attachments, the equipment could fall over.
Please also observe the instructions for installing the gas sampling hose that are provided on page 36.

3.4.3 Electrical connection

- Run the gas sampling hose's supply cable through the second (anti-kink) cable gland on the right.
- Connect the supply cable for the gas sampling hose to terminals 24 (L), 25 (N) and 26 (PE).
- Connect the protection conductor of the explosion-proof gas sampling hose to the potential equalization on site.

3.5 Compressed air connection

A compressed air connection is required only if HYGROPHIL® H 4230-112 cannot be operated with the over-pressure of the measuring gas.
Do not connect any supply to the compressed air connection at the bottom side of the device when operating with over-pressure!

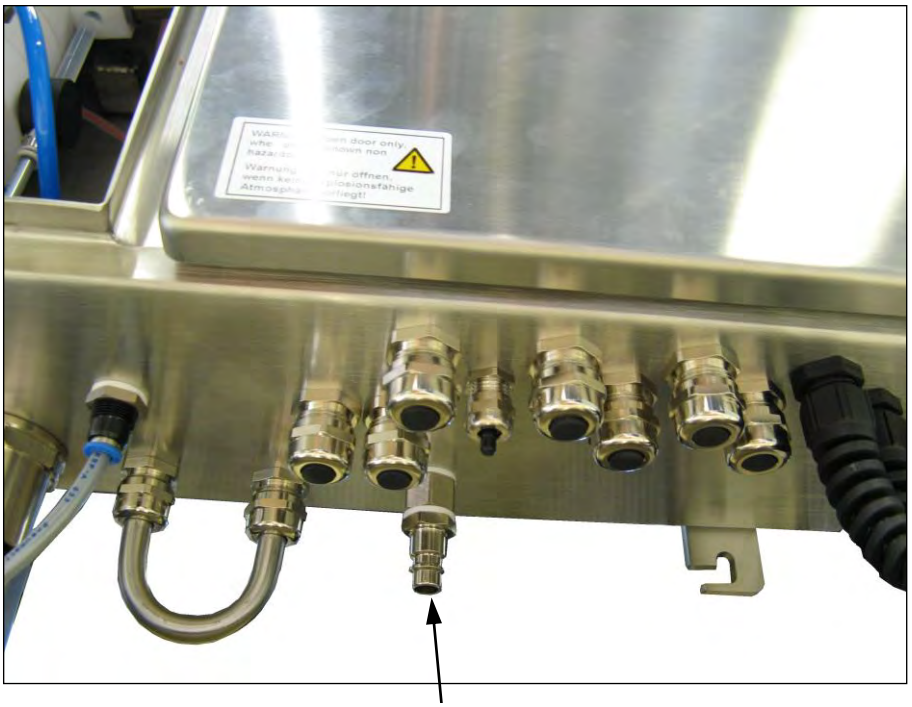

Do not connect any supply
when operating with over-pressure!

The compressed air connection should deliver maximum 17.5 Nl/min at a pressure of 2...5 bar. The pressure required depends on the negative pressure in the system from which the measurement gas is extracted.
A compressed air conditioner is supplied with HYGROPHIL® H 4230 as an accessory. It contains a reducing valve that can be used to set the necessary pressure.

The following diagram illustrates the interdependence between negative pressure and admission pressure.

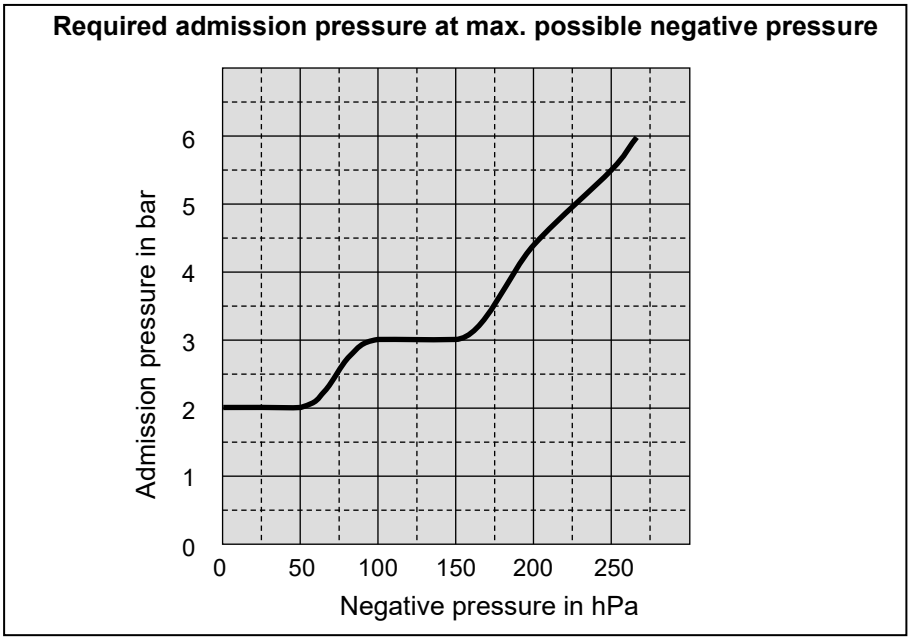

3.5.1 Mounting sequence

- Connect the compressed air supply to the compressed air connector stub on the measuring unit.

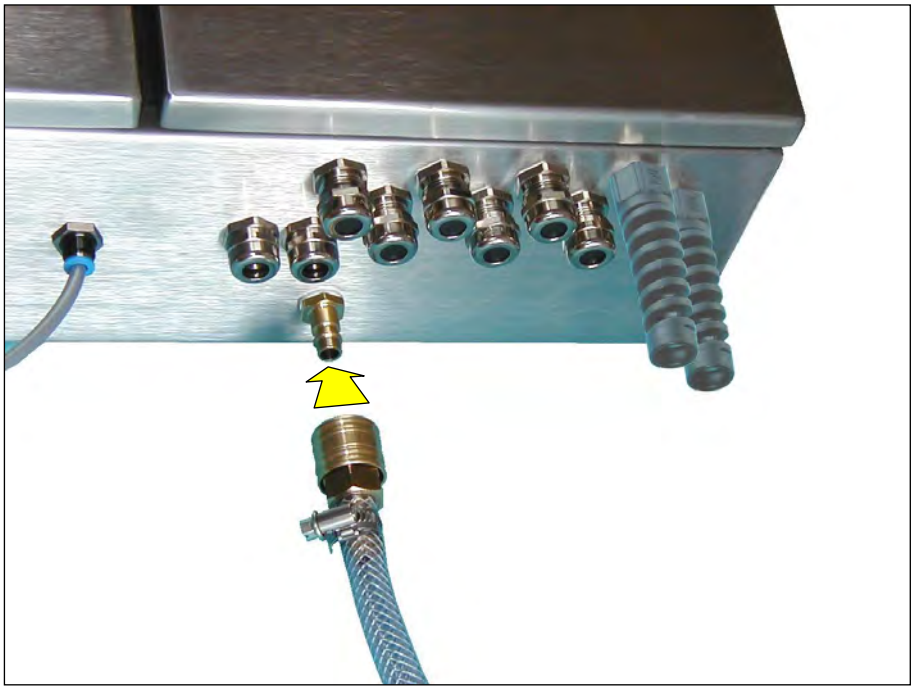

If the available supply pressure amounts to 5 bar or more, the compressed air conditioner must always be used.
Although the maintenance unit is designed for mounting on a wall, it can also be operated when lying unsecured on a table.

Install the parts in the following order starting from the compressed air source: manually actuated valve - reducing valve - HYGROPHIL® H 4230.
A maximum of 12 bar is allowed in the compressed air supply line upstream of the reducing valve.

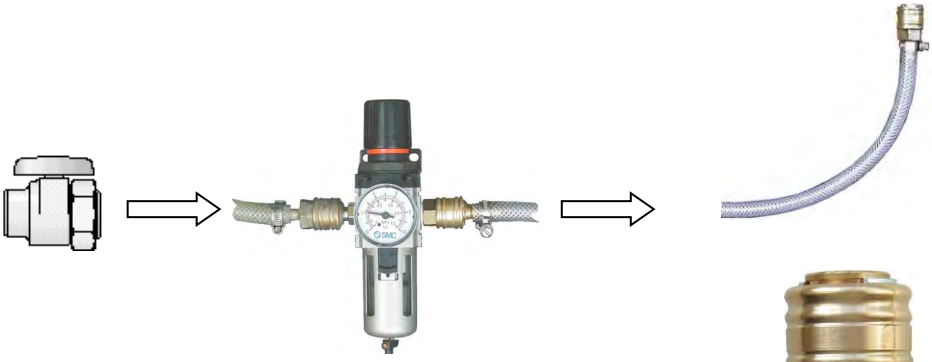

The compressed air coupling supplied with HYGROPHIL® H 4230 can also be attached to the unit's compressed air connector stub for connecting a 9 mm compressed air hose.

3.5.2 Setting the ejector's operating pressure

The gas to be measured is extracted from the respective system using the ejector and pumped through the measuring unit. The ejector is operated with compressed air.
The operating pressure of the compressed air must be set in line with the pressure at the extraction point. The lower the pressure in the customer system, the higher it is necessary to set the pressure.

Maximum efficiency of the ejector is obtained at a pressure of 5 bar. The negative pressure in the customer system compared to the pressure in the measurement station must not exceed 250 hPa.
Flow resistances occur in the hose and filter and these are intensified further by dirt. For this reason, the maximum permissible negative pressure allowed to be set is 200 hPa. This also provides leeway in terms of longer maintenance intervals.
The air pressure should be at least 2 bar. This ensures that sufficient reserves are available should the flow resistance be increased by dirt.

A maximum excess pressure of 5 hPa is permitted at the extraction point. This can be influenced by choosing the extraction point well (e.g. extraction before rather than after a blower).
In cases of excess pressure or a negative pressure of more than -200 hPa, it is possible to check whether it would be permissible to run the unit's outlet back to the customer system. HYGROPHIL then works neutrally in terms of pressure. Ask for advice if required.

If you have installed HYGOPHIL properly, you can start up the equipment as described in section 4.1. Please note the following points with regard to **setting the operating pressure**:

- Set the pressure at the compressed air conditioner's reducing valve to a minimum of 2 bar to begin with and start measuring.
  The proportional valve adjusts the air flow rate to the correct value in line with the pressure in the customer system and the flow relationships.
- If the value of 2 bar set for the pressure is not sufficient to generate the necessary gas flow rate and the message „FLOW TOO LOW" is output, increase the pressure to a maximum of 5 bar.
- About an hour after starting up the system, check again whether errors are displayed and make any corrections that are necessary.

3.6 Pressure-reduction controller

3.6.1 Assembly drawing

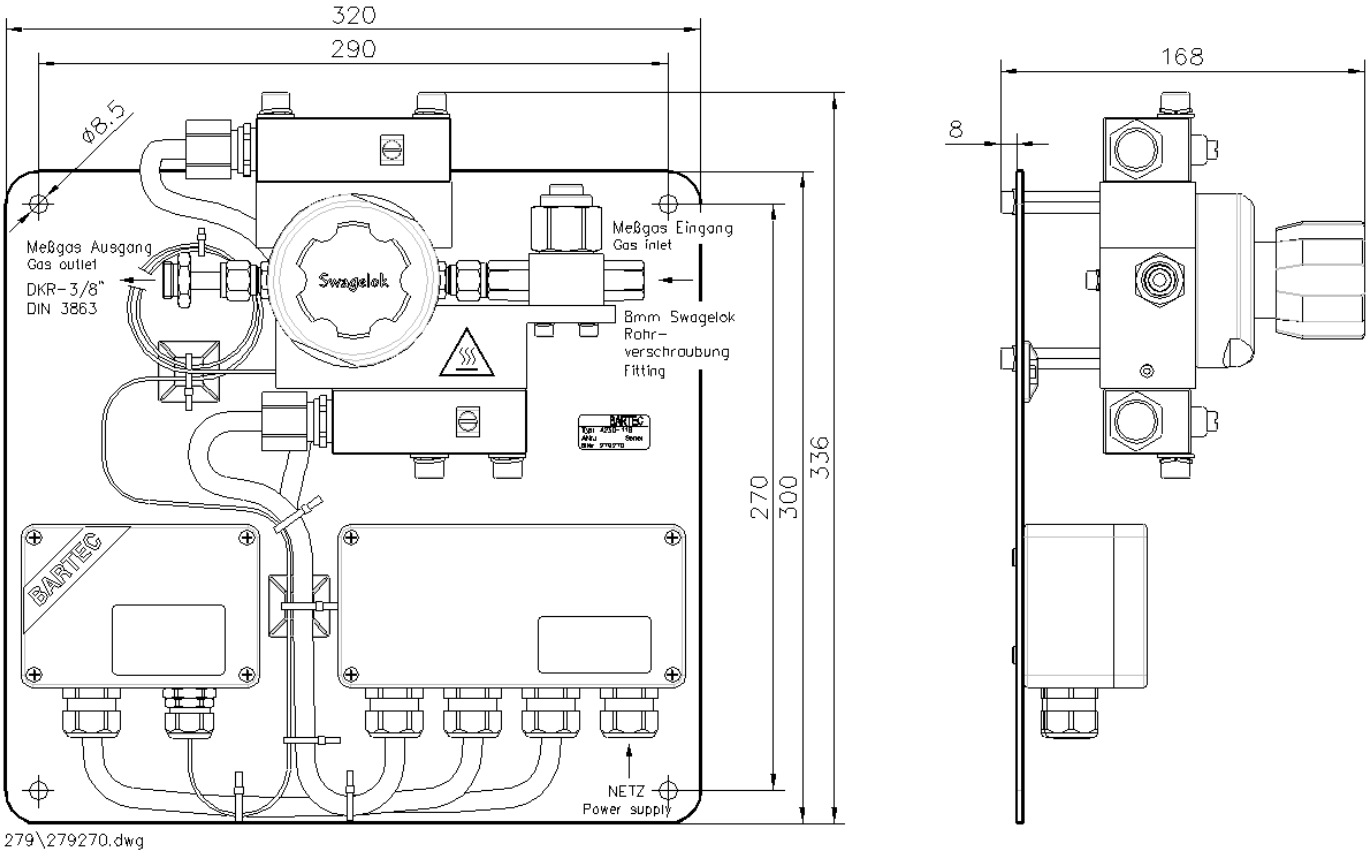

3.6.2 Settings

Configuration

For operating with over-pressure you must deactivate ejector operating.

- Start programming mode (see section 5.1.2).
- Open the menu EQUIP. CONF. (see section 5.2.4).
- Open the submenu FLOW-CONTR (see section 5.2.4.5) and switch off the compressed air control.
- Then open the submenu SET FLOW (see section 5.2.4.6). Set the nominal value for DP to 700 hPa and the tolerance for the proportional valve DP RANGE to 200 hPa.

Thermostat

When delivered the thermostat is set to a temperature that prevents the pressure-reduction controller from occurring condensation. Set the thermostat to a control temperature of at least 110 °C (maximum temperature: 140 °C).

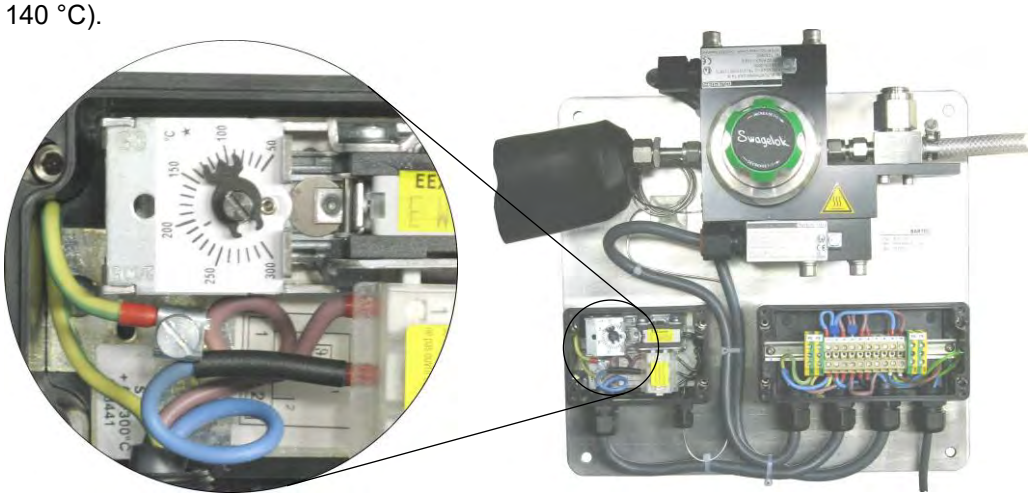

In the supply pipe of the pressure-reduction controller condensation has to be avoided too. If necessary the pipe must be heated.

Pressure regulation

Regulate the pressure to a value that effects a displayed differential pressure ΔP of 700 ±30hPa at the measuring device.

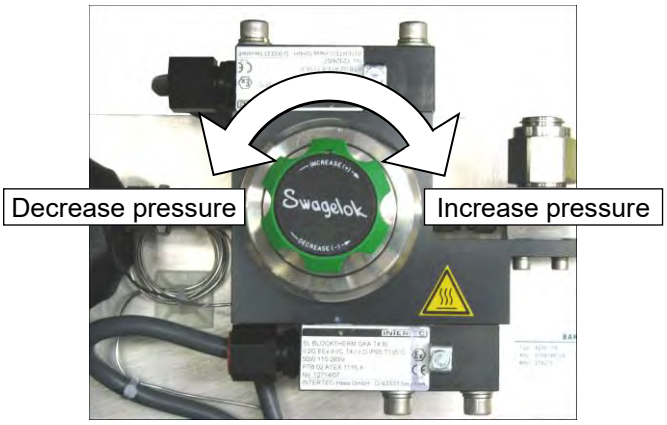

During the start sequence of the device you must readjust this value until the final operating parameters are achieved.

- Plug the bypass-jumper that deactivates the SILAS function.
- Turn the switch S2 into position 9. This will deactivate monitoring of the pressure inside the enclosure and you can observe the display of HYGROPHIL H when the enclosure door is opened.

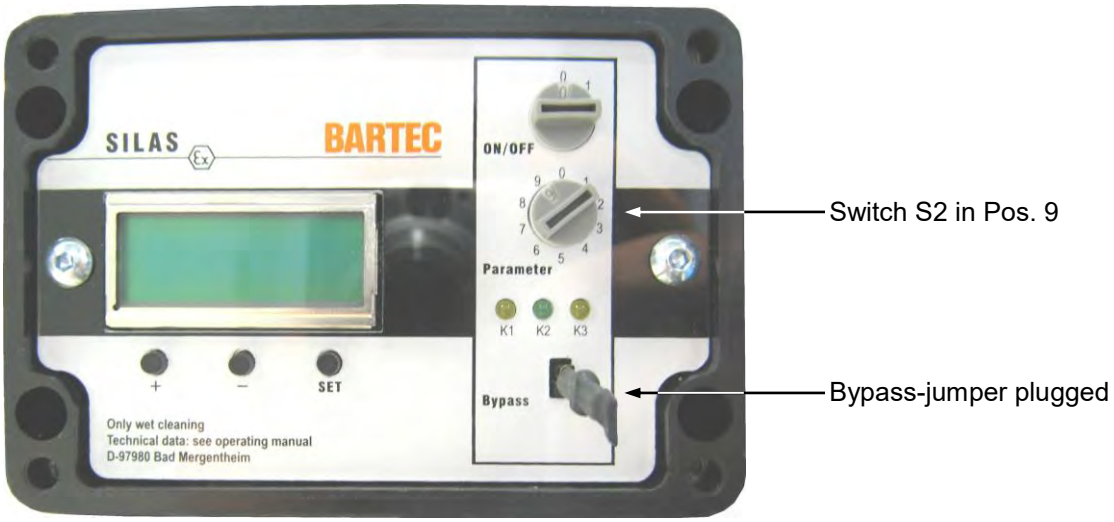

After that monitor operation of the device because the pressure-reduction controller will be heated further on by the thermostat and the opening level will change.

Therefore you should check the state of the device periodical.
The check-intervals must be shorter than the programmed TIMEOUT of 2400 seconds (40 minutes), lest the device will shut down and must be started anew.

Operating can be considered as safe if the parameters ΔP and TT didn't change significant for a period of more than 5 minutes and are in the range required for constant operating.

After achieving the operational parameters you must turn the switch S2 back to position 0 and remove the jumper!

Commissioning with „bypass-jumper requires the approval of the works supervisor or his appointee. Approval may only be given if it has been ensured that there will not be any explosive atmosphere for the duration of the necessary work or if the necessary protection measures have been taken against the risk of explosion.

3.7 Filling the water storage tank

In order to operate HYGROPHIL® H 4230, you must pour demineralised water (extracted using the ion exchange procedure) or boiler feed water into the storage tank. It does not have to be distilled water.
For each litre of water, add 5...10 ml of surfactant. The scope of delivery includes a 1l bottle of surfactant that is combined with a detergent. The task of the surfactant is to reduce the surface tension of the water in the measuring cell and support the self-cleaning effect. Reducing the water's surface tension allows the water to flow smoothly out of the measuring cell. This also has the result that the measurement result is not subject to any fluctuations due to a periodically rising water level as might be the case if the tension were not to be reduced.

- Begin by pouring the surfactant into the storage tank.
- Fill the storage tank with 2 litres of demineralised water.
- Position a condensate collector ready to catch the water, which may be mixed with impurities from the place of measurement.

In cases in which a particular type of impurity occurs, a detergent other than the one supplied may be more effective. If required, ask BARTEC for advice, specifying the type of impurity.

A larger water storage tank is available as an optional accessory. The content of 11 litres is enough for an operating duration of around 3 weeks.

Under certain conditions, a permanent, constant water supply may be a good idea.

In order to catch the water that flows out of the bottom of the unit during operation you can screw the supplied hose connection nipple to the outlet connection. You can then connect a 3/8" water hose to it.

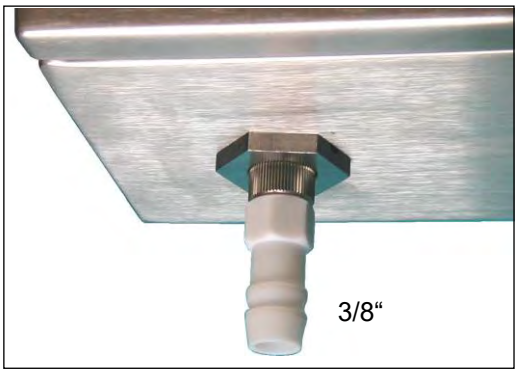

3.8 External water detector

You can install an external water detector for the purpose of monitoring the level in the water tank. The water detector is available as an optional extra.

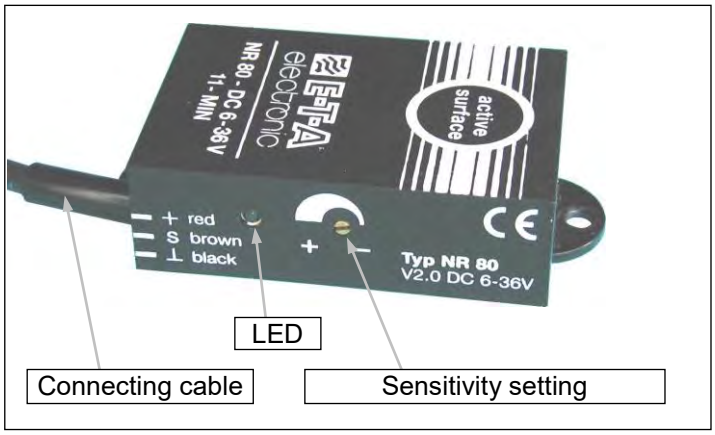

3.8.1 Electrical connection

- Insert the cable of the external water detector through the third cable gland from the left and into the unit's enclosure.
- Connect the cable of the external water detector to terminals 5, 6 and 7.

Terminals 4230	5	6	7
Cable ext. water detector	+ red	S brown	⊥ black

3.8.2 Calibration

- Remove the water tank from the mount.
- Hold the water detector's sensor up to the unfilled part of the container. The green LED on the water detector must be off.
- Then hold the water detector's sensor up to the filled part of the container. The LED on the water detector should now light up.
- If necessary, use the small screwdriver supplied to turn the screw for setting the sensitivity until the LED on the filled part of the container lights up and that on the unfilled part does not light up.

3.8.3 Installation

- Use two M 3 bolts and nuts to fix the external water detector to the inner side of the mounting strap (front side of the tank attachment) with the sensor side facing the tank.
- Then put the tank back in.

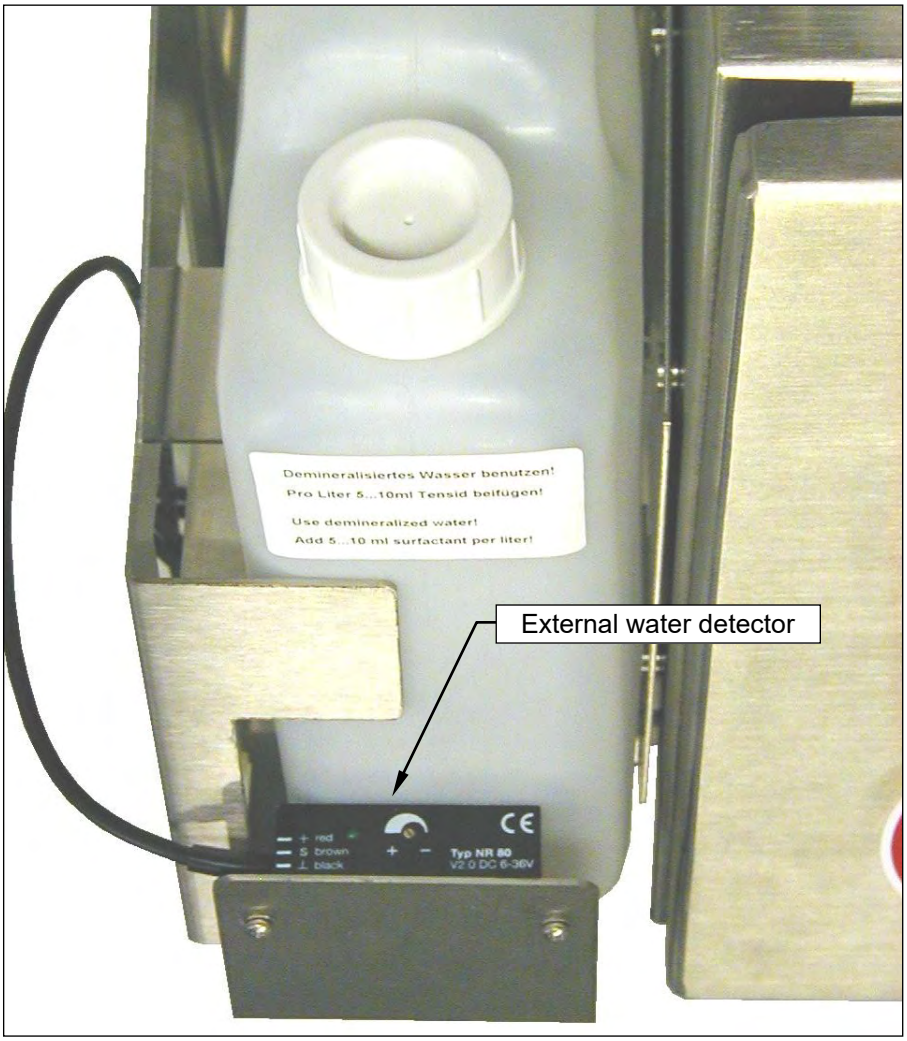

4 Operation

4.1 Start-up

Before starting up HYGROPHIL® H 4230, please check again that the following conditions are met.

1. Power supply
   – The mains voltage must correspond to the operating voltage of HYGROPHIL® H 4230 and all components (gas sampling hose, filter, accessories).
2. Gas sampling hose
   – Mounted correctly
   – All connections secure
   – power supply cable connected
3. Compressed air
   – Compressed air supply of at least 2...5 bar
   – Compressed air stopcock initially closed
4. Water supply
   – Sufficient water reserve
   – Surfactant added

Once you have completed these checks, begin by opening the stopcock for the compressed air supply.
Then switch on the supply voltage.
The equipment does not have a mains switch. It is switched on when the supply voltage is switched on for the system as a whole.

4.2 Operating mode

Once the operating voltage has been switched on, the program version is displayed and the equipment begins by carrying out a self test. The equipment then undergoes a start-up phase, in which the measuring cell is filled with water and the gas sampling hose is heated.
If you wish to check that the equipment is starting up as it should, open the enclosure door on the right.

If you use the device under explosion-proof conditions with pressure-reduction controller, you may open the enclosure only after having deactivated the SILAS-controller functions.
To that follow the directions on page 43.

To begin with, all LEDs light up and a display test is carried out. After this, the software version is displayed.
All measured value outputs are left at „0“ until the necessary measuring conditions are met.
Once all the specified conditions have been set, the current measured values are displayed. At the same time, the measured value outputs jump to the current measured values.

4.3 Configuration

Under various operating conditions it will be necessary to select or change certain settings. All changes – with the exception of setting up the compressed air supply (see section 3.5.2) – are made through programming. Programming is described in chapter 5.

4.4 Changing the slave address

The default slave address is 100.
If you wish to change the slave address, press the F6 key in operating mode.

Baudrate
1.5 MBd

The baud rate is then displayed briefly (if the device is working connected to the bus).

act. Slaveaddress
is 100

Afterwards, the current slave address is displayed briefly.

Change
Slaveaddr. ? 1/0

You are then asked whether you wish to change the slave address.

0 or ENTER	⌫	Don't make any changes, return to the measured value display
1	⌫	Change the slave address

new Slaveaddress
= 100

If you answered the question by pressing the 1 key, you can now enter the new slave address.

new Slaveaddress
is 120

Confirm the entry by pressing the ENTER key.
The display briefly shows the new slave address before returning to the measured values.

5 Programming

You can program HYGROPHIL 4230 to prepare it for use in your existing measurement and operation conditions.
An overview of the menu structure in programming mode can be found on page 51.

5.1 General notes

5.1.1 Interaction

During programming, the user interacts with the equipment by answering questions with alternative answers. In various menus, the character string 1/0 appears after the question. Entering 1 means „yes“ and entering 0 means „no“.
Pressing the ENTER key at this point has the effect that no changes are made in the menu and you are taken to the next menu.

You also use the 1 and 0 keys to choose between two options. The option currently selected is highlighted. If you press the ENTER key this option is confirmed without change and the next menu appears.

If you are requested to enter measurement variable designations (when assigning the measurand or operand to the analogue output), you must press the appropriate measurement variable key.

If you need to enter numerical values (such as limits), you can do so using the keyboard and confirm by pressing the ENTER key. The previous value is deleted as soon as you press a key.
If you do not wish to change the value that has been set, confirm it by pressing the ENTER key.

Incorrect numerical entries can be deleted one character at a time using the CLEAR key.
If the cursor is positioned over the first character of an input field for numerical values (when you open the input field), you can use the CLEAR key to delete the entire entry. The entire entry is deleted automatically as soon as you press a key for entering a new value.

5.1.2 Programming process

Start programming mode

You start programming mode by pressing the PROG key. Once programming mode has been started, all of the unit's functions – including the heating and air flow controls – switch to standby mode.

Password

When you switch to programming mode, you are first requested to enter your password. You can only make changes to the program if you enter the correct password (which is 4230) and confirm with ENTER.

Menu selection

Once you have entered your password the first main menu appears, which allows you to assign a measurand or operand to the analogue output. Pressing the ENTER key has the effect that you are taken to the next main menu without making any changes. If a sub-menu exists, you open it by pressing 1. Once you have changed or adopted values using the ENTER key you are taken to the next menu option.

CLEAR *key*

Within the input masks you use the CLEAR key to correct entries (see above).

Entries

When you enter values, the system will only accept plausible entries, meaning that they must lie within a certain range. You cannot leave the menu if the value you have entered is too high or too low. Delete the entry using the CLEAR key and enter a different value.

Quit programming mode

Programming mode is quit automatically following the last menu (SET-LIMITS). Once you have changed the desired parameters, simply keep pressing the ENTER key until the equipment returns to operating mode.
Due to the fact that the equipment was in standby mode during programming, the temperature may have dropped so far that error messages appear when you first return to operating mode. The display will correct itself after a short period of time.

The chart on the next page provides you with an overview of the structure of the menus in programming mode.

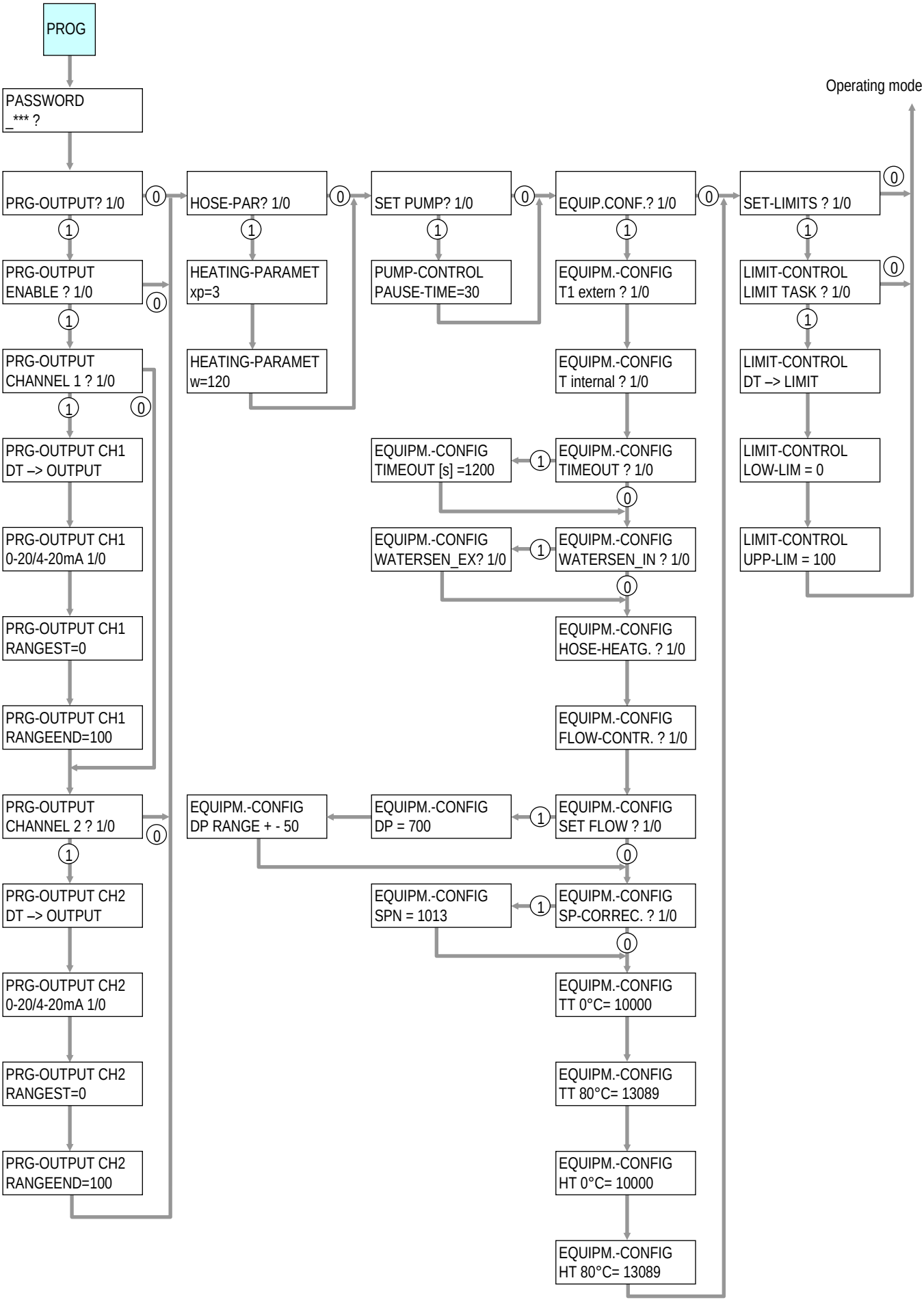
PROG
PASSWORD
_*** ?
Operating mode
PRG-OUTPUT? 1/0
PRG-OUTPUT ENABLE ? 1/0
PRG-OUTPUT CHANNEL 1 ? 1/0
PRG-OUTPUT CH1 DT –> OUTPUT
PRG-OUTPUT CH1 0-20/4-20mA 1/0
PRG-OUTPUT CH1 RANGEST=0
PRG-OUTPUT CH1 RANGEEND=100
PRG-OUTPUT CHANNEL 2 ? 1/0
PRG-OUTPUT CH2 DT –> OUTPUT
PRG-OUTPUT CH2 0-20/4-20mA 1/0
PRG-OUTPUT CH2 RANGEST=0
PRG-OUTPUT CH2 RANGEEND=100
HOSE-PAR? 1/0
HEATING-PARAMET xp=3
HEATING-PARAMET w=120
EQUIPM.-CONFIG DP RANGE + - 50
SET PUMP? 1/0
PUMP-CONTROL PAUSE-TIME=30
EQUIPM.-CONFIG DP = 700
EQUIPM.-CONFIG SPN = 1013
EQUIP.CONF.? 1/0
EQUIPM.-CONFIG T1 extern ? 1/0
EQUIPM.-CONFIG T internal ? 1/0
EQUIPM.-CONFIG TIMEOUT ? 1/0
EQUIPM.-CONFIG TIMEOUT [s] =1200
EQUIPM.-CONFIG WATERSEN_IN ? 1/0
EQUIPM.-CONFIG WATERSEN_EX? 1/0
EQUIPM.-CONFIG HOSE-HEATG. ? 1/0
EQUIPM.-CONFIG FLOW-CONTR. ? 1/0
EQUIPM.-CONFIG SET FLOW ? 1/0
EQUIPM.-CONFIG SP-CORREC. ? 1/0
EQUIPM.-CONFIG TT 0°C= 10000
EQUIPM.-CONFIG TT 80°C= 13089
EQUIPM.-CONFIG HT 0°C= 10000
EQUIPM.-CONFIG HT 80°C= 13089
SET-LIMITS ? 1/0
LIMIT-CONTROL LIMIT TASK ? 1/0
LIMIT-CONTROL DT –> LIMIT
LIMIT-CONTROL LOW-LIM = 0
LIMIT-CONTROL UPP-LIM = 100

5.2 Changing the program parameters

This section explains the exact procedure for programming in all the menus. The order in which the menus are dealt with here is the same order in which they appear in the display in programming mode after you have entered your password.

5.2.1 Programming the analogue outputs

The two analogue outputs allow you to connect recording instruments, controllers or other units. You can assign any of the measurement variables to the outputs.

PRG-OUTPUT 1/0

[0] or [ENTER] [⌫] Don't make any changes, go to the next menu (hose heating parameters)
[1] ⌫ Change the programming of the analogue outputs

PRG-OUTPUT ENABLE ? 1/0

[0] ⌫ Switching OFF the analogue outputs (output current: 0 mA)
[1] ⌫ Switching ON the analogue outputs
[ENTER] ⌫ Don't make any changes

PRG-OUTPUT CHANNEL 1 ? 1/0

[0] or [ENTER] ⌫ Don't make any changes, go to analogue output 2
[1] ⌫ Change the programming of analogue output 1

PRG-OUTPUT CH 1 DT –> OUTPUT

You can assign any of the measurement variables to the analogue output.
[ENTER] ⌫ Don't make any changes
Select measurement variable: press measurement variable key, [ENTER]

PRG-OUTPUT CH 1 0-20/4-20 mA 1/0

You can select the output current for the output from two current ranges.
[ENTER] ⌫ Don't make any changes
Select output current:
[1] ⌫ Output current: 0...20 mA
[0] ⌫ Output current: 4...20 mA

Within the overall measurement range you can define a range that is to be split.
[*Example*] *The dew-point temperature has an overall measurement range of 0...100 °C. You set the lower measurement range limit to 60°C and the upper measurement range limit to 80 °C.*
If the output current is set to 4...20 mA,
60 °C corresponds to 4 mA and 80 °C corresponds to 20 mA.

PRG-OUTPUT CH 1 RANGEST = 0

[ENTER] ⌫ Don't make any changes
Select lower measurement range limit: enter new value using keyboard, [ENTER] (-50...2000)

PRG-OUTPUT CH 1 RANGEEND = 100

[ENTER] ⌫ Don't make any changes
Select upper measurement range limit: enter new value using keyboard, [ENTER] (RANGEST...2000)

PRG-OUTPUT
CHANNEL 2 ? 1/0

0 or ENTER ⌫ Don't make any changes, go to the next menu (hose heating parameters)

1 ⌫ Change the programming of analogue output 2

Analogue output 2 is programmed in the same way as analogue output 1.

5.2.2 Programming the hose heating parameters

- Ideally, the gas sampling hose temperature should be 20-30 °C above the dew-point temperature.
- When HYGROPHIL H 4230 is delivered, the gas sampling hose temperature is set to 120 °C.
- If you do not have any information with regard to the range in which the humidity of the gas to be measured lies, start the measurements with the default value.
- Observe the dew-point temperature during the measurements.
- If the measured dew-point temperatures lie between 60 and 90 °C, no change needs to be made to the gas sampling hose temperature.
- If the dew-point temperature is regularly over 90 °C, the gas sampling hose temperature must be increased to 130 ... 140 °C.
- If the dew-point temperature is below 60 °C, you must reduce the gas sampling hose temperature in order to prevent display errors.

The following diagram is intended to help you find the most suitable gas sampling hose temperature.

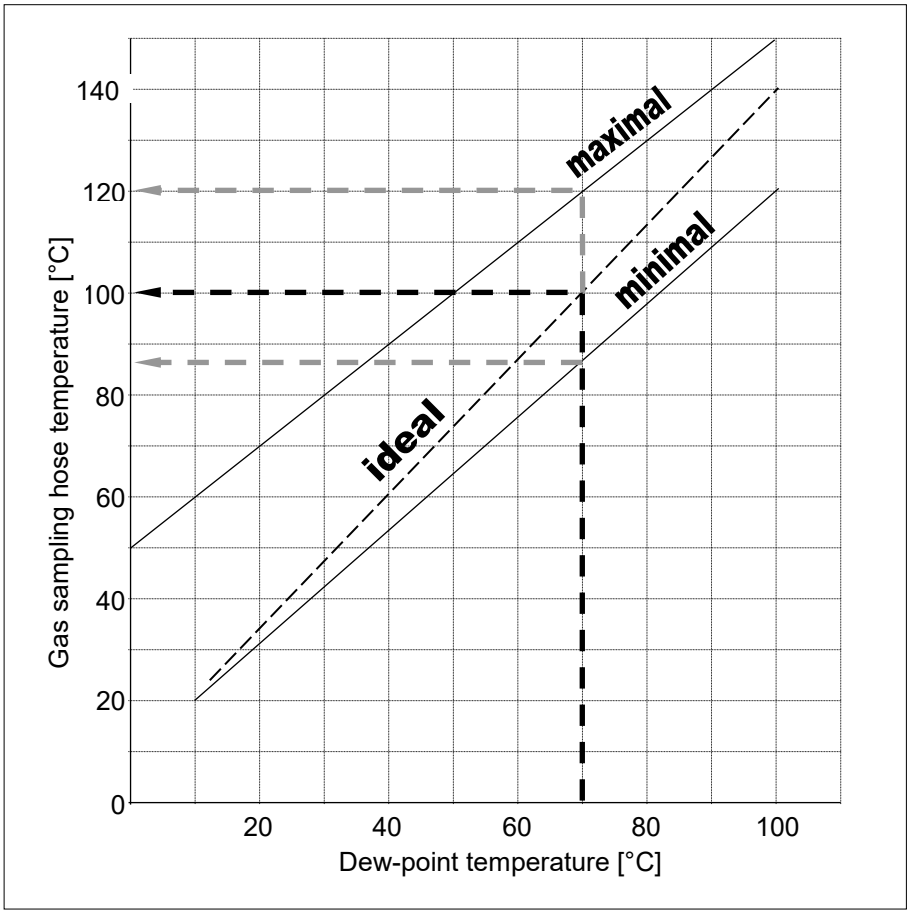

Example *The example illustrated gives rise to the following values for a dew-point temperature of 70 °C:*

- *Minimum gas sampling hose temperature = 87 °C*
- *Ideal gas sampling hose temperature = 100 °C*
- *Maximum gas sampling hose temperature = 120 °C*

HOSE-PAR 1/0

0 or ENTER ⌫ Don't make any changes, go to the next menu (pump control)

1 ⌫ Change the programming of the hose heating parameters

The gas sampling hose temperature is adjusted within the proportional range in proportion to the deviation from the setpoint value so that it can move towards this value quickly. The proportional range is factory-set to 3%.

HEATING-PARAMET xp=3

ENTER ⌫ Don't make any changes

Set proportional range: enter new value using keyboard, ENTER
(0...100)

You can define a target gas sampling hose temperature and the equipment will automatically monitor the adherence to this target. If the actual gas sampling hose temperature deviates by more than ± 10 °C from the target temperature, a fault message is output.

HEATING-PARAMET w = 120

ENTER ⌫ Don't make any changes

Define target gas sampling hose temperature: enter new value using keyboard ENTER

(0...140)

5.2.3 Programming the pump control

The delivery rate of the water pump must be set in such a way that there is always excess water that flows out of the measuring cell and guarantees the self-cleaning effect of the humidity sensor. You should then see the water dripping off at the outlet connection.

The pump operates intermittently. The delivery rate is modified by means of the length of the breaks (pauses) between the intervals.

The break is factory-set to 30 intervals. This time is sufficient for standard applications. In the case of dry gas or a large quantity of dirt, you can increase the delivery rate by shortening the break.

SET PUMP ? 1/0

0 or ENTER ⌫ Don't make any changes, go to the next menu (equipment configuration)

1 ⌫ Change the programming of the pump control

PUMP-CONTROL PAUSE-TIME = 30

ENTER ⌫ Don't make any changes

Change stoppage time: enter new value using keyboard, ENTER
(15...100; recommended: 25...35)

5.2.4 Programming the equipment configuration

EQUIP.CONF. ? 1/0

0 or ENTER	⌫	Don't make any changes, go to the next menu (limit monitoring)
1	⌫	Change the programming of the equipment configuration

5.2.4.1 Temperature sensors

HYGROPHIL H 4230 contains two temperature measuring circuits for the following temperature ranges: $T1_{external}$: 0...200 °C
$T_{internal}$: 0...100 °C.
The temperature measuring circuits are designed for the connection of PT 100 temperature sensors and can be used as you wish.

$T1_{external}$ is an external temperature sensor. In order to measure temperature-related humidity variables (RH, h) you must install the $T1_{external}$ temperature sensor in the place where the humidity variable is to be measured.

EQUIPM.-CONFIG
T1 extern ? 1/0

ENTER	⌫	Don't make any changes
1	⌫	Switch on temperature sensor $T1_{external}$
0	⌫	Switch off temperature sensor $T1_{external}$

Temperature sensor $T_{internal}$ is installed permanently in the enclosure. It is used to compensate the humid temperature (HT).

EQUIPM.-CONFIG
T internal ? 1/0

ENTER	⌫	Don't make any changes
1	⌫	Switch on temperature sensor $T_{internal}$
0	⌫	Switch off temperature sensor $T_{internal}$

The internal temperature sensor should always be switched on in standard use of the device!

5.2.4.2 Safety switch-off („TIMEOUT")

You can program HYGROPHIL 4230 in such a way that it switches off following a defined time after a fault occurs (TIMEOUT).
You can restart the equipment following a „TIMEOUT" by pressing the RESET key or by disconnecting the equipment from the mains and then connecting it again.

If the equipment switches off automatically for safety reasons, you should immediately attempt to locate the cause. If it is not possible to rectify the fault straightaway, switch off the equipment and the compressed air supply.

EQUIPM.-CONFIG
TIMEOUT ? 1/0

0 or ENTER	⌫	Don't make any changes, go to the next menu (water detector)
1	⌫	Change TIMEOUT programming

EQUIPM.-CONFIG
TIMEOUT [s] = 1200

ENTER	⌫	Don't make any changes

Change the time for automatic switch-off: enter a new value in seconds using the keyboard, ENTER
(600...3599)

5.2.4.3 Water detector

If the water falls below the internal water detector level, the message WATER-ERROR appears. The pump is then switched to filling mode until the required level is reached again. The message is also output if the external water detector responds.

EQUIPM.-CONFIG
WATERSEN_IN ? 1/0

ENTER	⌫	Don't make any changes
1	⌫	Switch on internal water detector
0	⌫	Switch off internal water detector

The purpose of the external water detector is to monitor the water reserve in the storage tank. Switch the external water detector off if it is not installed, as otherwise an error message will be output during operation.

EQUIPM.-CONFIG
WATERSEN_EX ? 1/0

ENTER	⌫	Don't make any changes
1	⌫	Switch on external water detector
0	⌫	Switch off external water detector

5.2.4.4 Hose heating controller

If dew-point temperatures always lie below the ambient temperature even in winter, and also if the input temperature is controlled externally, it is possible to do without the hose heating. In this case it is necessary to switch off the integrated hose heating controller. Otherwise fault reports will be output and the unit will cease to output measured values.

EQUIPM.-CONFIG
HOSE-HEATG. ? 1/0

ENTER	⌫	Don't make any changes
1	⌫	Switch on hose heating controller
0	⌫	Switch off hose heating controller

5.2.4.5 Compressed air control

If the air flow rate is controlled by external units that are available on the premises of the system operator, the integrated compressed air control must be switched off. This prevents any faults concerning this control from being reported.
The operator of the system is responsible for ensuring that the correct gas flow rate is observed.

EQUIPM.-CONFIG
FLOW-CONTR. ? 1/0

ENTER	⌫	Don't make any changes
1	⌫	Switch on compressed air control
0	⌫	Switch off compressed air control

5.2.4.6 Flow setting

For controlling the flow you can set a nominal value for differential pressure DP.

EQUIPM.-CONFIG
SET FLOW ? 1/0

ENTER	⌫	Don’t make any changes
1	⌫	Set a nominal value for DP
0	⌫	No nominal value for DP, switch to next menu.

EQUIPM.-CONFIG
DP = 700

Enter the nominal value for DP using keyboard, (100...999) ENTER

EQUIPM.-CONFIG
DP RANGE + - 50

After entering the nominal value enter the tolerance for the proportional valve. Thus you define the limits for FLOW TOO LOW and FLOW TO HIGH. The range for expedient values is ±50...±200.

The diagram below shows the flow depending from differential pressure.

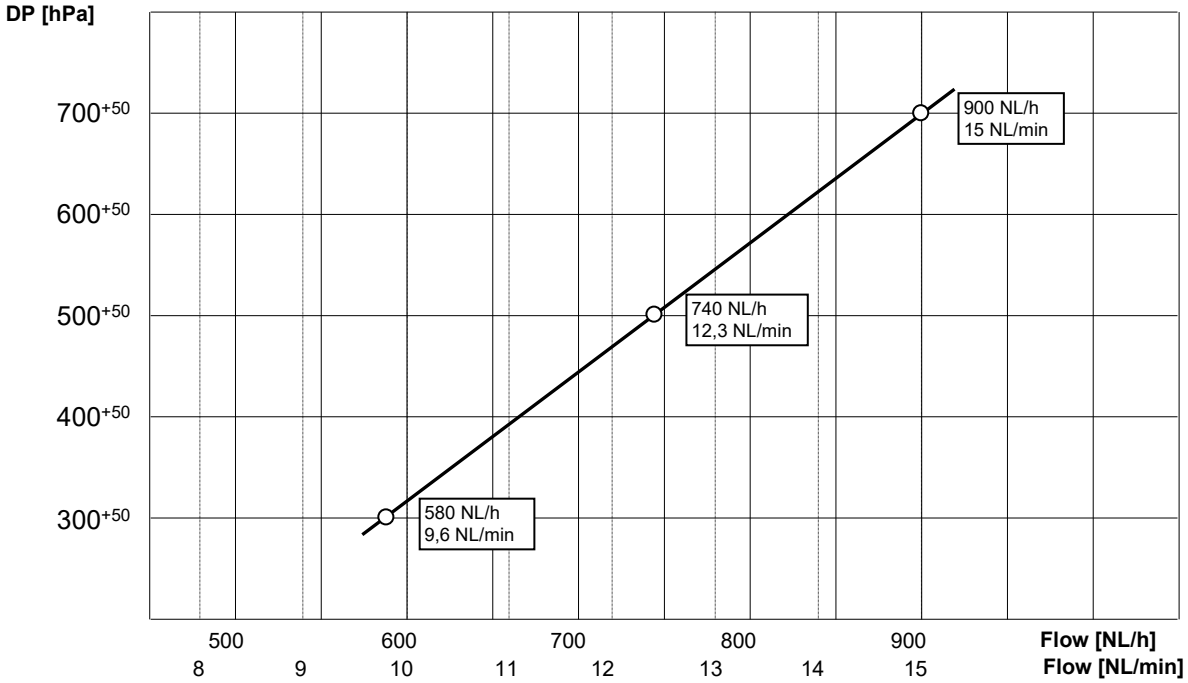

5.2.4.7 Reference pressure

Under exceptional operating conditions, the air pressure in the measuring chamber may deviate from the pressure at the point where the measurement gas is extracted. This is usually the case, for instance, if long gas sampling hoses need to be laid. These differences in pressure give rise to minor errors in the calculation of humidity values. For application cases where such errors are undesirable, you can enter the pressure at the place of measurement as a fixed value.

EQUIPM.-CONFIG
SP-CORREC. ? 1/0

ENTER ⌫ Don't make any changes
1 ⌫ Enter and use a fixed reference pressure
0 ⌫ Do not use a fixed reference pressure, go to the next menu (sensor comparison)

EQUIPM.-CONFIG
SPN = 1013

ENTER ⌫ Don't make any changes
Change reference pressure: enter new value in hPa using keyboard, ENTER
(500...1500)

5.2.4.8 Sensor calibration

After installing or exchanging the temperature sensors, you must enter their calibration data. You will find the calibration data on the sensor.

EQUIPM.-CONFIG
TT 0°C = 10000

ENTER ⌫ Don't make any changes
Change resistance value for TT at 0 °C: enter new value in hundredth Ω using keyboard, ENTER
Example *TT at 0 °C = 100Ω ⌫ entry: 10000*

EQUIPM.-CONFIG
TT 80°C = 13089

ENTER ⌫ Don't make any changes
Change resistance value for TT at 80°C: enter new value in hundredth Ω using keyboard, ENTER

EQUIPM.-CONFIG
HT 0°C = 10000

ENTER ⌫ Don't make any changes
Change resistance value for HT at 0 °C: enter new value in hundredth Ω using keyboard, ENTER

EQUIPM.-CONFIG
HT 80°C = 13089

ENTER ⌫ Don't make any changes
Change resistance value for HT at 80 °C: enter new value in hundredth Ω using keyboard, ENTER

5.2.5 Limit monitoring

For measured values or arithmetic values you can define limits within the respective scale. If the value exceeds or falls below a defined limit, the warning relay is activated and the ERROR LED lights up.

SET LIMITS ? 1/0

[0] or [ENTER] ⌫ Don’t make any changes, quit programming mode
[1] ⌫ Change the programming of the limits

LIMIT-CONTROL
LIMIT TASK ? 1/0

[0] ⌫ Switching OFF the limit monitoring, quit programming mode
[1] ⌫ Switching ON the limit monitoring
[ENTER] ⌫ Don’t make any changes

LIMIT-CONTROL
DT –> LIMIT

[ENTER] ⌫ Confirm measurand or operand for defining the limit

LIMIT-CONTROL
LOW-LIM = 0

[ENTER] ⌫ Don’t make any changes
Define lower limit: enter new value using keyboard, [ENTER]

LIMIT-CONTROL
UPP-LIM = 100

[ENTER] ⌫ Don’t make any changes
Define upper limit: enter new value using keyboard, [ENTER]

Once you have finished programming the limits for limit monitoring, programming mode is also quit and the equipment returns to operating mode.

6 Maintenance

6.1 General information

HYGROPHIL® 4230 is as good as maintenance-free. The only maintenance necessary during operation is to refill the water tank and add a surfactant.

Depending on the conditions of use, it may be necessary for the measuring chamber and any filters installed to be cleaned periodically.

The water separator on the external reducing valve should be checked occasionally. If necessary, this must be emptied and the filter must be cleaned.

In rare cases when particular types of dirt occur, it is also necessary for the gas sampling hose to be inspected and cleaned on a regular basis.

Particular attention must be paid to making sure that the entire air supply system is completely leak-proof. There is always negative pressure in the measuring chamber. Leaks cause leakage air to be inducted.

Even small quantities of leakage air seriously falsify the measurement result. You must therefore make sure that the air supply system is completely leak-proof.

Check hoses, lines and connections periodically for leakages, wear and tear or damage. Repair any parts that need repairing.

The rest of this chapter provides maintenance instructions for the following components of the equipment:

- Analogue outputs
- Measuring chamber
- Water pump
- Gas sampling hose
- Reducing valve

6.2 Testing the analogue outputs

With a precise mA-meter you can test the analogue outputs. For it you must call up a test mode (press key F7). In this mode you can enter a current for each analogue output. The entered value is to measure at the corresponding output.

The following chart provides you with an overview of the structure of the test mode.

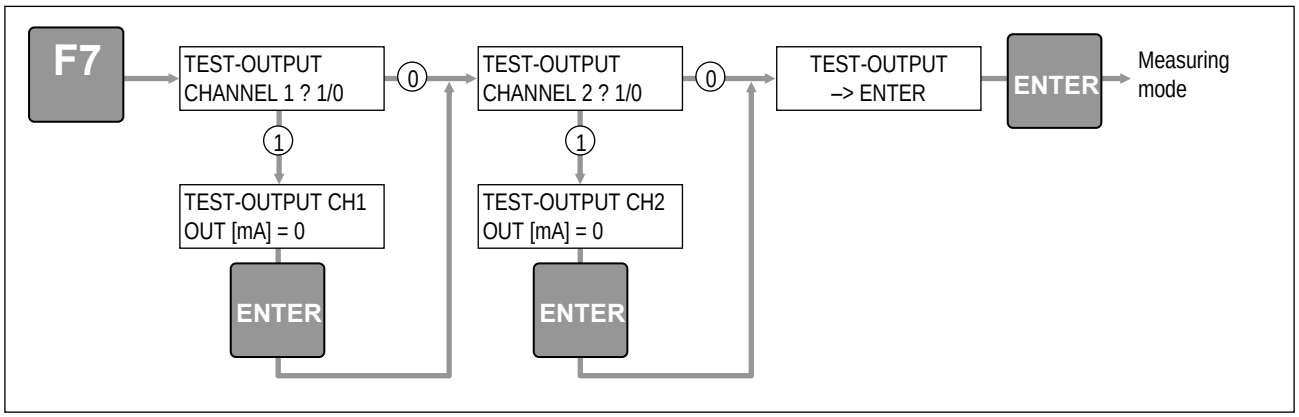

6.3 Measuring chamber

6.3.1 Cleaning interval

The time interval for cleaning the measuring chamber essentially depends on the conditions of use.

In extreme cases, the type and quantity of dirt in the air to be measured may make cleaning necessary every four weeks.
If the air flow rate displayed is too low, it is necessary not only to check the compressed air supply and clean the filter but also to check the measuring chamber and clean it where necessary.

Regardless of the dirt that occurs, thorough maintenance should be carried out once a year. In addition to checking the hoses and seals, this should also include checking and cleaning the measuring chamber.

6.3.2 Types of dirt

The measuring chamber may be contaminated in particular by the following types of dirt:

- **Oils and grease**

Due to the high temperature of the air to be measured, these substances are often present in a gaseous state and are therefore able to pass through the filter. In the cooler measuring chamber they condense and, after a certain amount of time, form a layer that may block the air ducts. This can be delayed considerably by adding the surfactant correctly. Despite this, evaporation in the measuring cell is not prevented; the surface of the water remains free of oil and grease thanks to the self-cleaning effect.

- **Tar**

Tar is a fairly problematic form of contamination as the self-cleaning effect does not work fully in this case. The equipment must be cleaned using suitable solvents.

- **Dust**

Dust that is not dissolved by water is deposited on the bottom of the measuring cell. The measuring cell fills with sludge and, after some time, the correct humid temperature can no longer be formed.
Water-soluble substances and gases that form compounds with water (such as sulphur dioxide) do not disrupt the evaporation. Measurement errors remain within the guaranteed accuracy range.

In order to inspect and clean the measuring chamber and to exchange hoses, seals or sensors it is necessary to disassemble and dismantle the measuring chamber.

6.3.3 Disassembling the measuring chamber

- Make sure that the equipment is switched off.
- Remove the gas sampling hose (detach the nut and pull out the gas sampling hose carefully upwards).

In order to disassemble the measuring chamber you need to remove all wires and hoses that run to the measuring chamber. In order to avoid confusing the wires and hoses during assembly, it is a good idea to make a note of their positions or label them clearly.

- Remove the 3 pressure hoses carefully **from the side of the enclosure**. They are labelled 1, 2 and 3 from the back to the front.

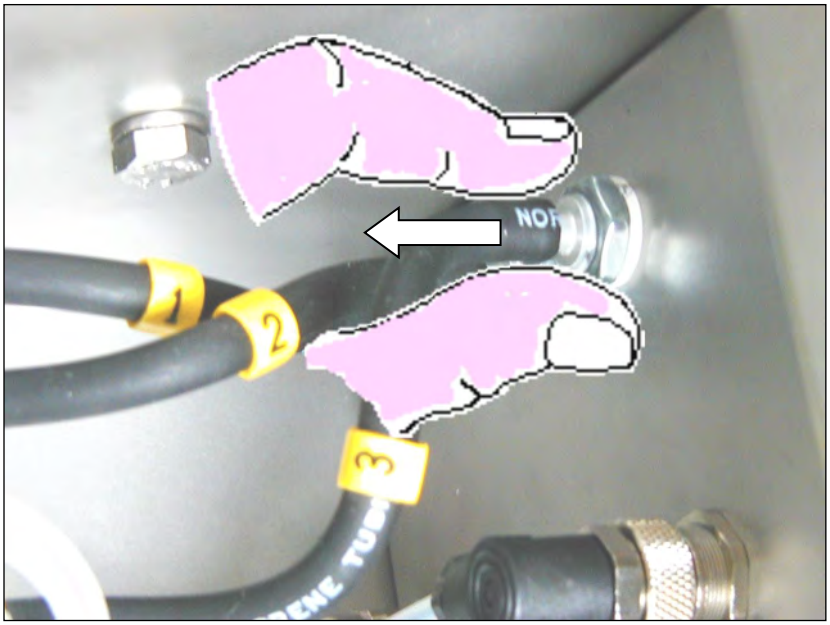

- Detach the wires for the dry temperature sensor, humid temperature sensor and water detector (detach the knurled nut and plug-in connector).

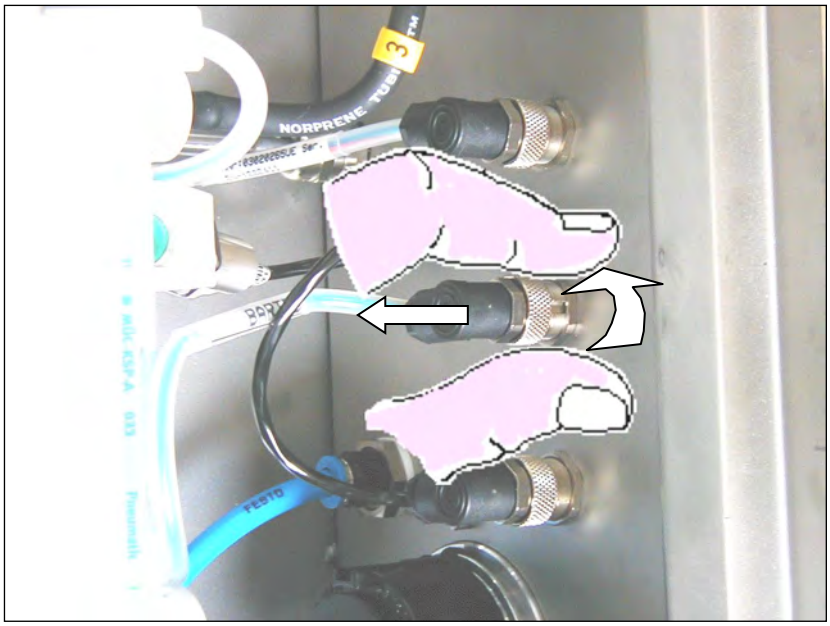

- Remove the water supply hose (this is done by pressing the white catch upwards and simultaneously pulling out the hose downwards).

- Detach the compressed air hose (this is done by pushing in the blue catch and simultaneously pulling out the hose).

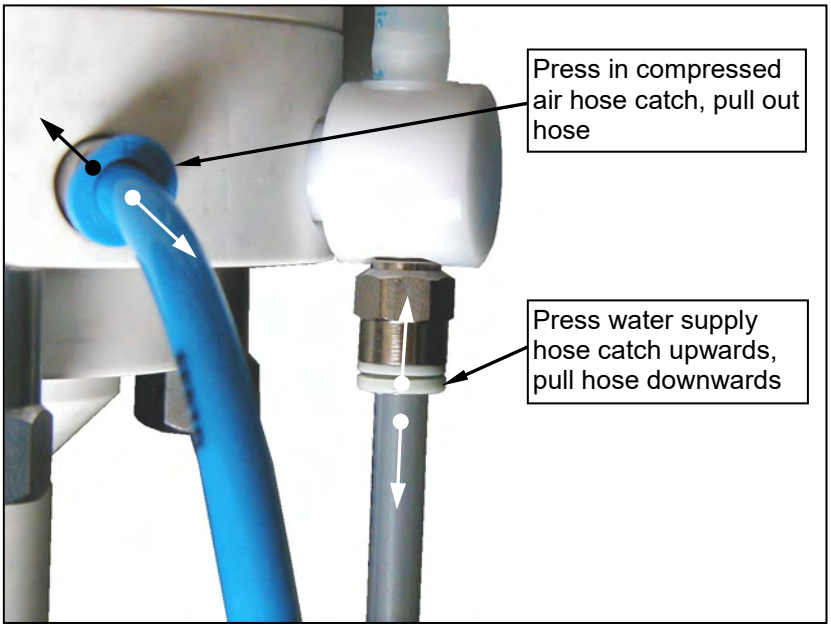

In order to make it easier to press the catches, you can use the hose detachment aid (included in the set of accessories).

- Unscrew and remove the outlet connection (knurled screw).

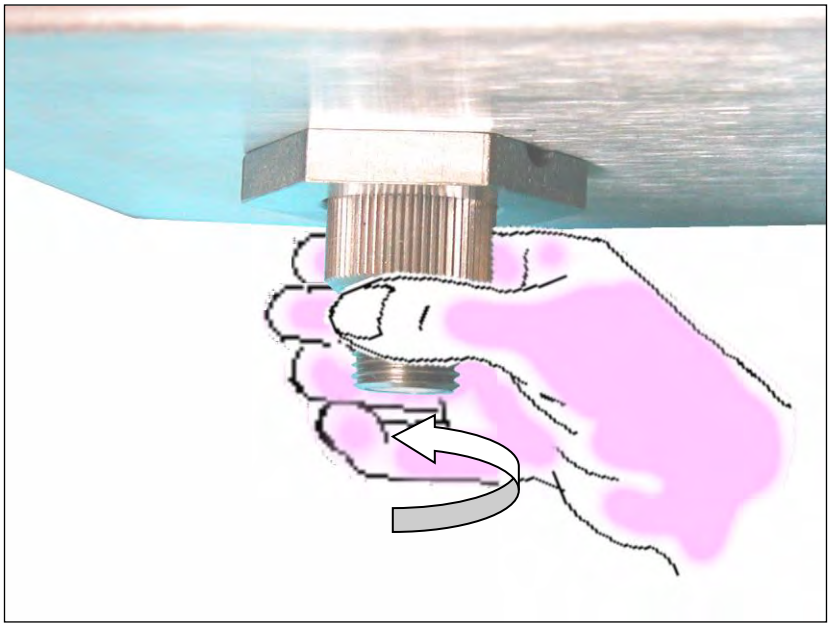

- Pull out the ejector outlet downwards while at the same time twisting it.

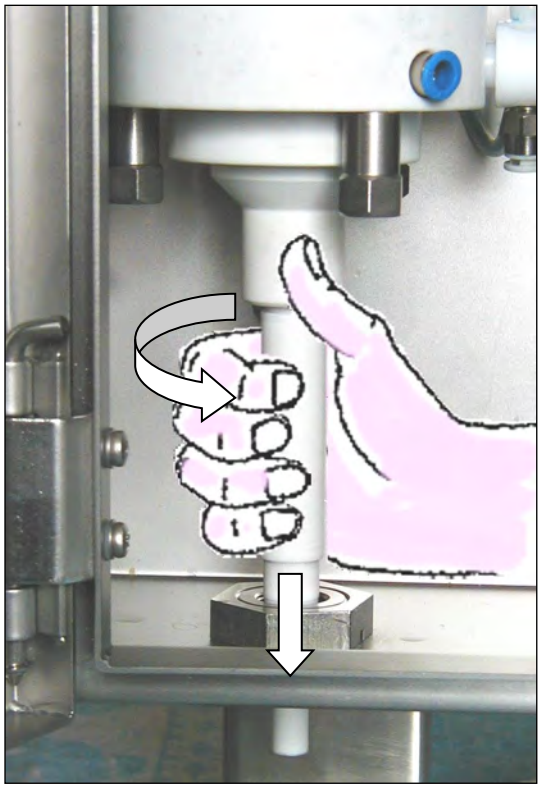

- Detach the three upper M 5 /A/F 14 mounting nuts.

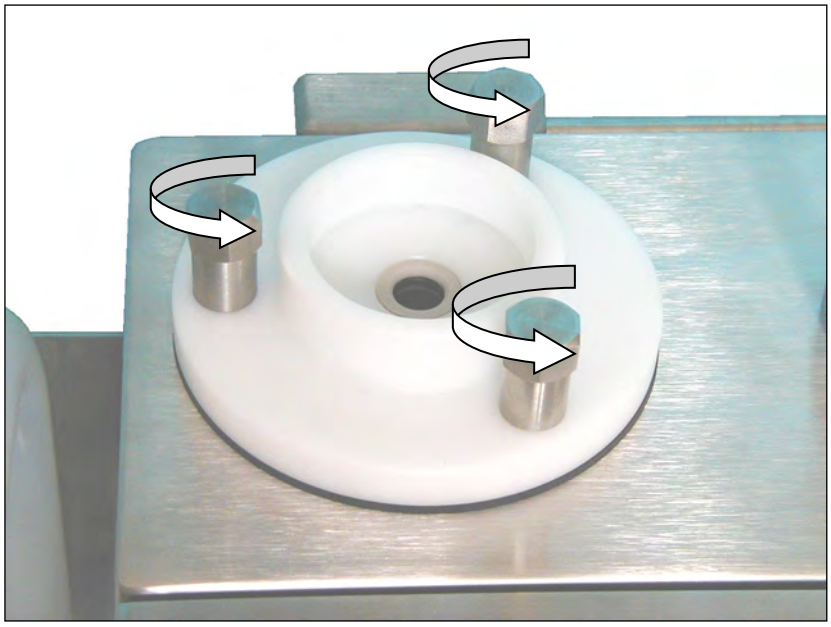

- Pull the measuring chamber carefully downwards and take it out of the enclosure.

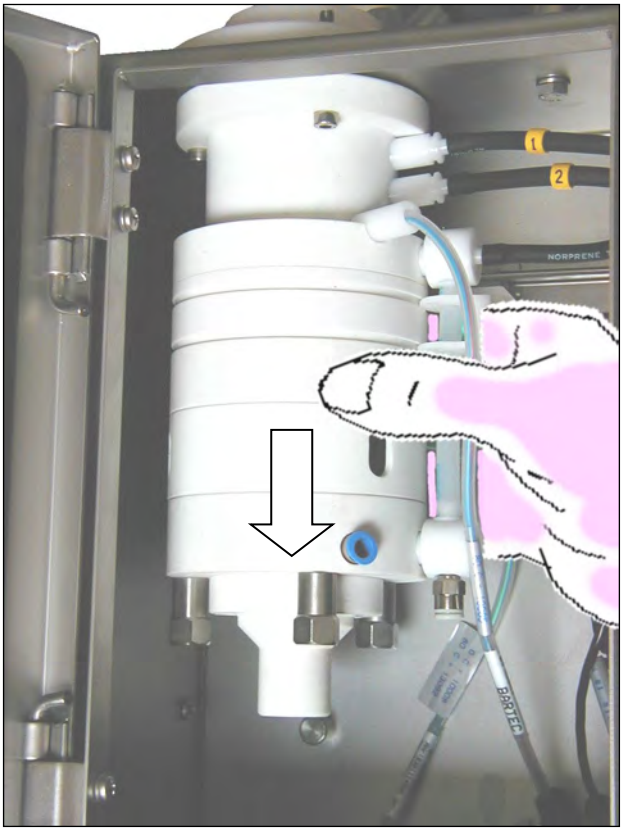

6.3.4 Dismantling the measuring chamber

- Pull the two T-pieces out of the measuring chamber enclosure together with the water detector.

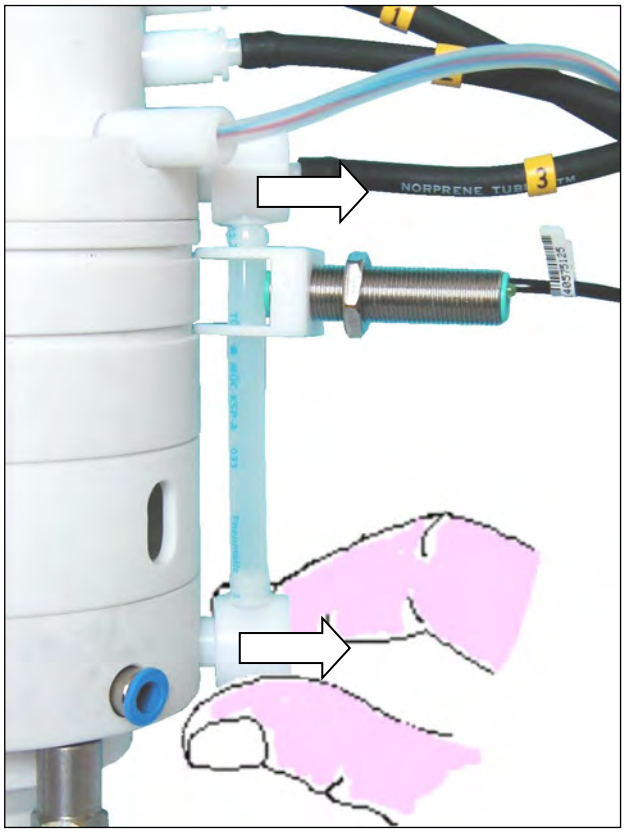

- Detach the three lower nuts (M 5 / A/F 14).

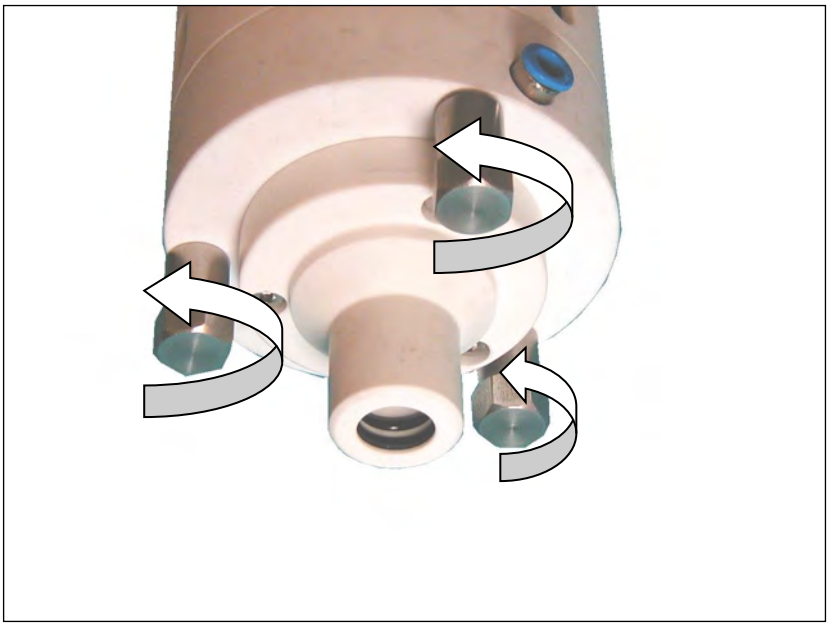

- Remove the two parts of the lower measuring chamber section pulling downwards.

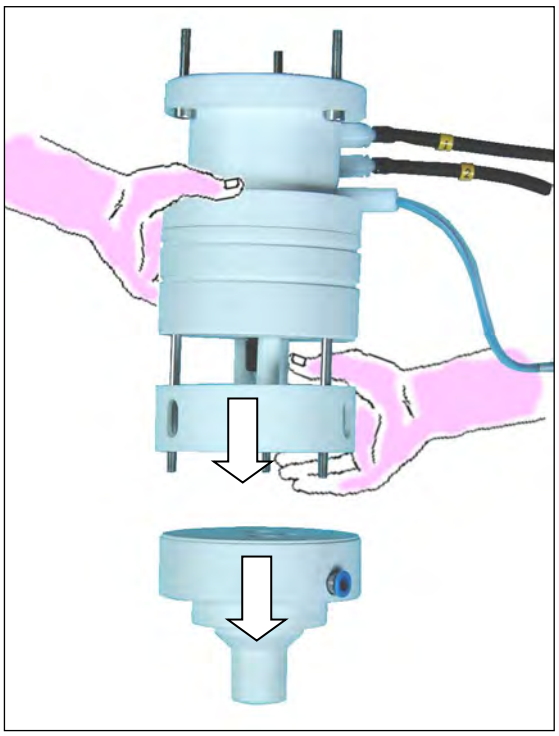

- Place the measuring chamber on the three lower threaded pins and press the middle measuring chamber section downwards.

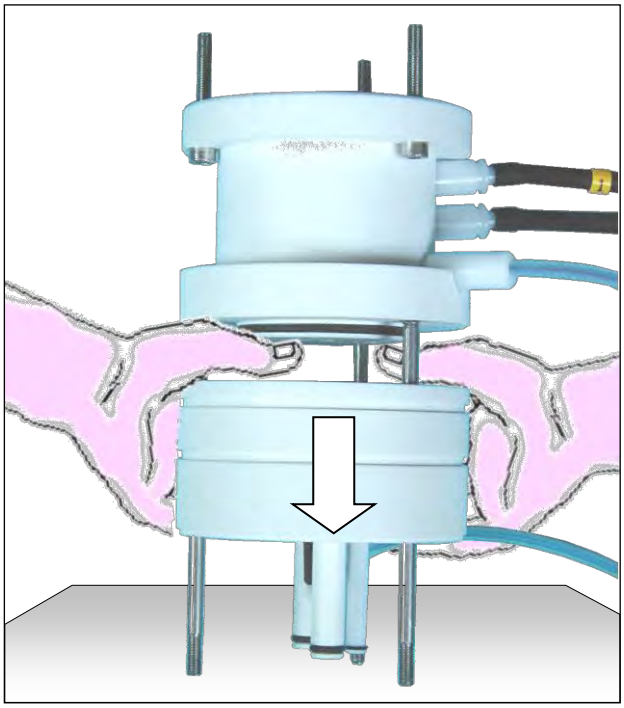

- Push the measuring cell downwards and out of the middle measuring chamber section. Attention: never press the “tulip” but press carefully beside the “tulip” to the measuring cell by using a screw driver or a similar tool.

6.3.5 Changing the humid temperature sensor

- Detach the knurled nut from the sensor mount and carefully extract the sensor.

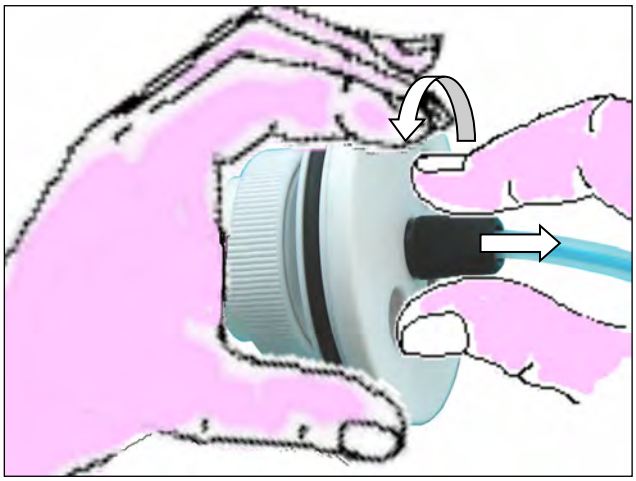

- Insert the new sensor and tighten the knurled nut.
- After reassembling the measuring chamber, connect the sensor’s connector in the enclosure and tighten the knurled nut.
- Sensor calibration see section 5.2.4.8.

6.3.6 Changing the dry temperature sensor

You can change the dry sensor without having to disassemble the measuring chamber.

- Detach the connector's knurled nut and remove the plug-in connector.
- Detach the knurled nut from the sensor mount and carefully extract the sensor.

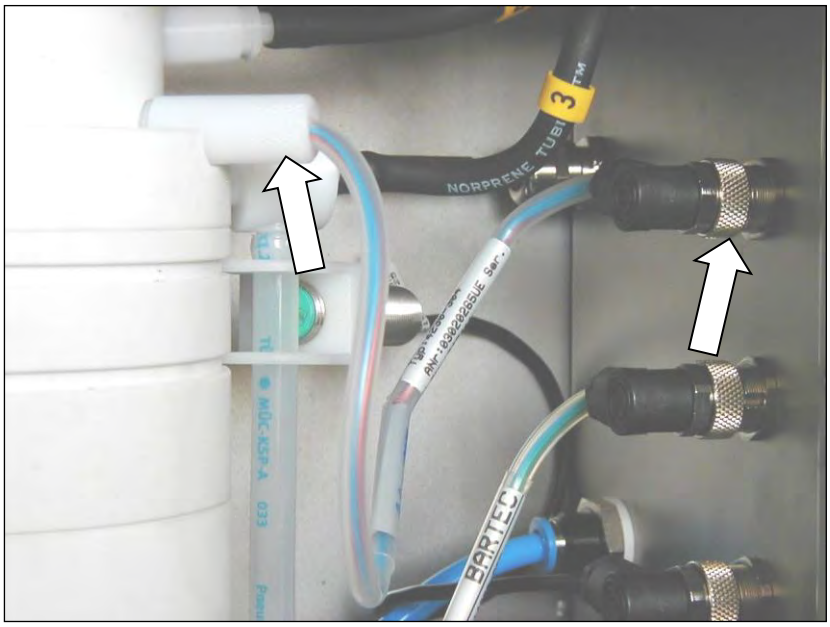

- Insert the new sensor and tighten the knurled nut on the sensor mount.
- Connect the sensor's connector and tighten the knurled nut.
- Sensor calibration see section 5.2.4.8.

6.3.7 Cleaning the measuring chamber

Upper flange
The measuring chamber's upper flange, which has been left in the enclosure, can be cleaned using a lint-free cloth. Pull it to and fro through the opening.

Upper measuring chamber section
Extract the dry temperature sensor (detach the white knurled nut and carefully extract the sensor). You can now clean the vertical air duct using a pipe cleaner or the like.

When cleaning the air duct, take care not to damage or widen the hole. Sharp-edged tools are not suitable!

Remove the pressure hoses and clean the holes of the hose nipples as well as the side and vertical holes used for the pressure measurement. Again, use a pipe cleaner.

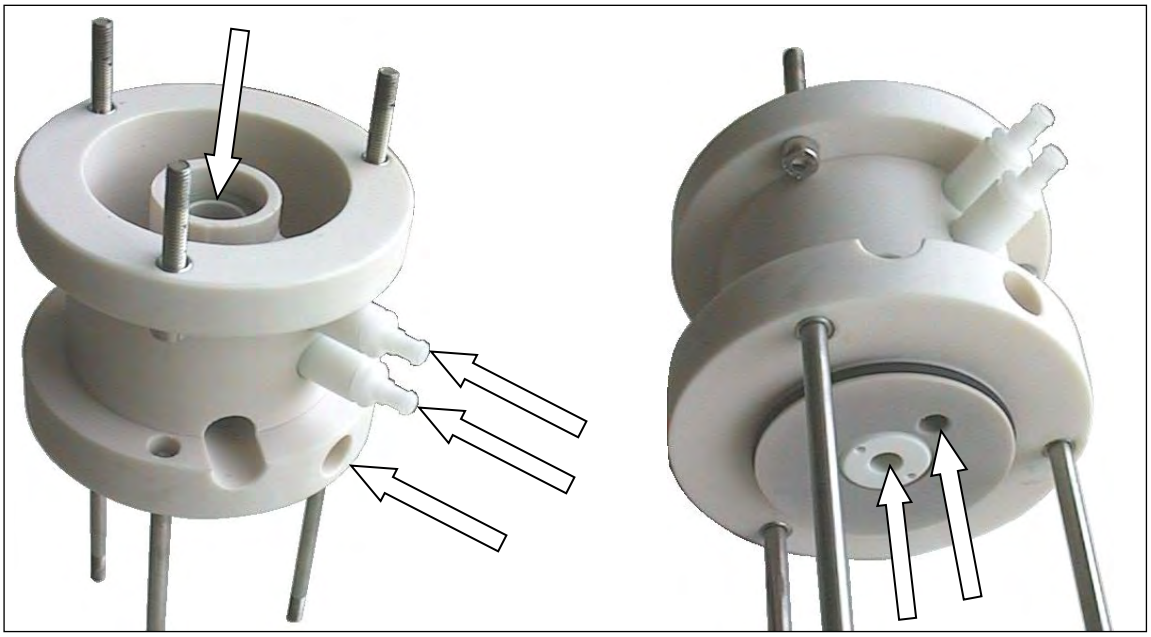

Middle measuring chamber section and measuring cell
The interior of the measuring chamber often contains just greasy dirt. The measuring cell may contain sludge.
In most cases, such dirt can be removed using a soap solution or household washing up liquid. Glass cleaning agents, as used in chemical laboratories, are also quite suitable.
If the dirt proves to be hard to remove, you should look for a suitable solvent for the relevant type of dirt (for instance, benzine for deposits of substances such as tar).

The materials used in the measuring chamber are highly resistant to corrosion and solvents, which means that even substances with intensive effects can be used. If in doubt, please consult your service centre.

You should preferably clean the middle section of the measuring chamber using a soft cloth and the bottom of the measuring chamber using a brush, together with a detergent.

Be careful with the measuring cell. The ceramic ring in the measuring cell is brittle and can therefore be broken easily.

Lower measuring chamber section with ejector
You should not dismantle the ejector because it is adjusted at the factory in order to maximize efficiency.
If you notice that the consumption of compressed air is rising or if the message „FLOW TOO LOW“ appears although the supply of compressed air is sufficient and the station pressure is ≤ -200 hPa, this means that the ejector is not working properly.

- Clean the lower section of the ejector by inserting pipe cleaners from the underside.
- You can remove any dirt also from the ejector outlet using a bundle of pipe cleaners.

If this does not rectify the fault, any dirt may be deposit inside of the ejector. This can impair the flow. To remove this dirt and coat you must open the ejector.

- Loosen the three screws and remove the lower part of the ejector.

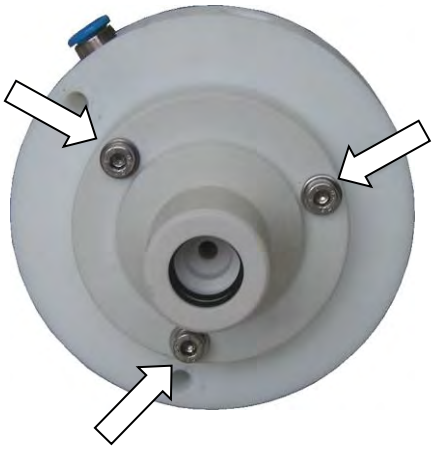

- Clean both parts of the ejector. Use a piece of cloth or brushes and a detergent that is able to dissolve the respective film of dirt.

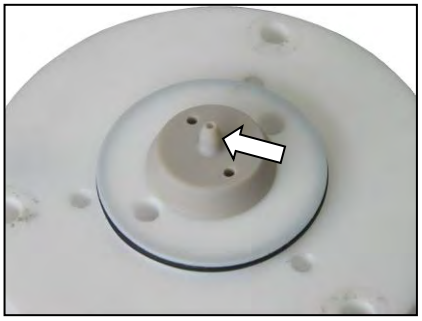

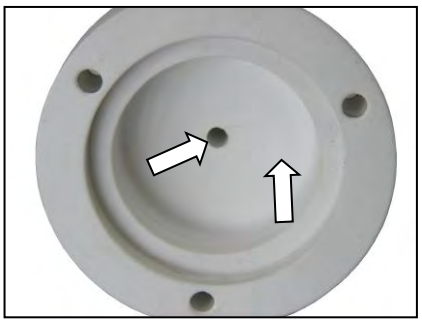

Never use sharp-edged objects to clean the ejector. The ejector gets waste if its surface is scratched.

If this does not rectify the fault, the ejector is defective and must be replaced. In this case, please contact your service centre.

Outlet channels and inlet connection

- Extract the two outlet channels from the lower section of the measuring cell. When using measuring cell type 4230-115 or 116 you can also extract the water inlet connection.

Never extract the water inlet connection from measuring cell type 4230-107!

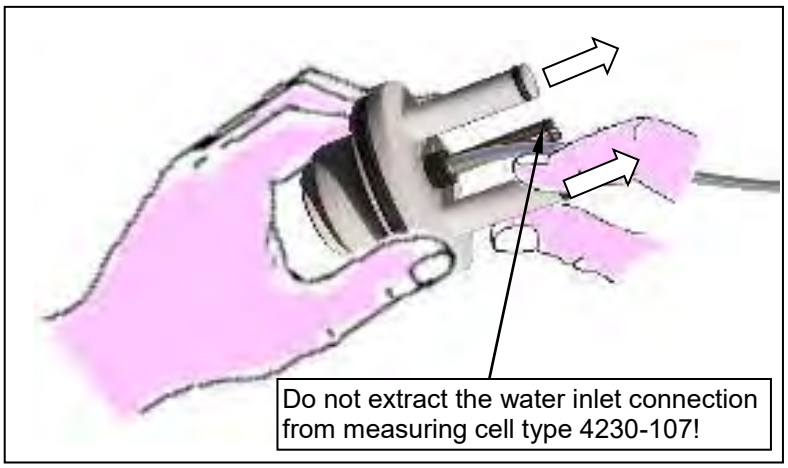

- Clean the interior of the outlet channels and the inlet connector using a pipe cleaner.

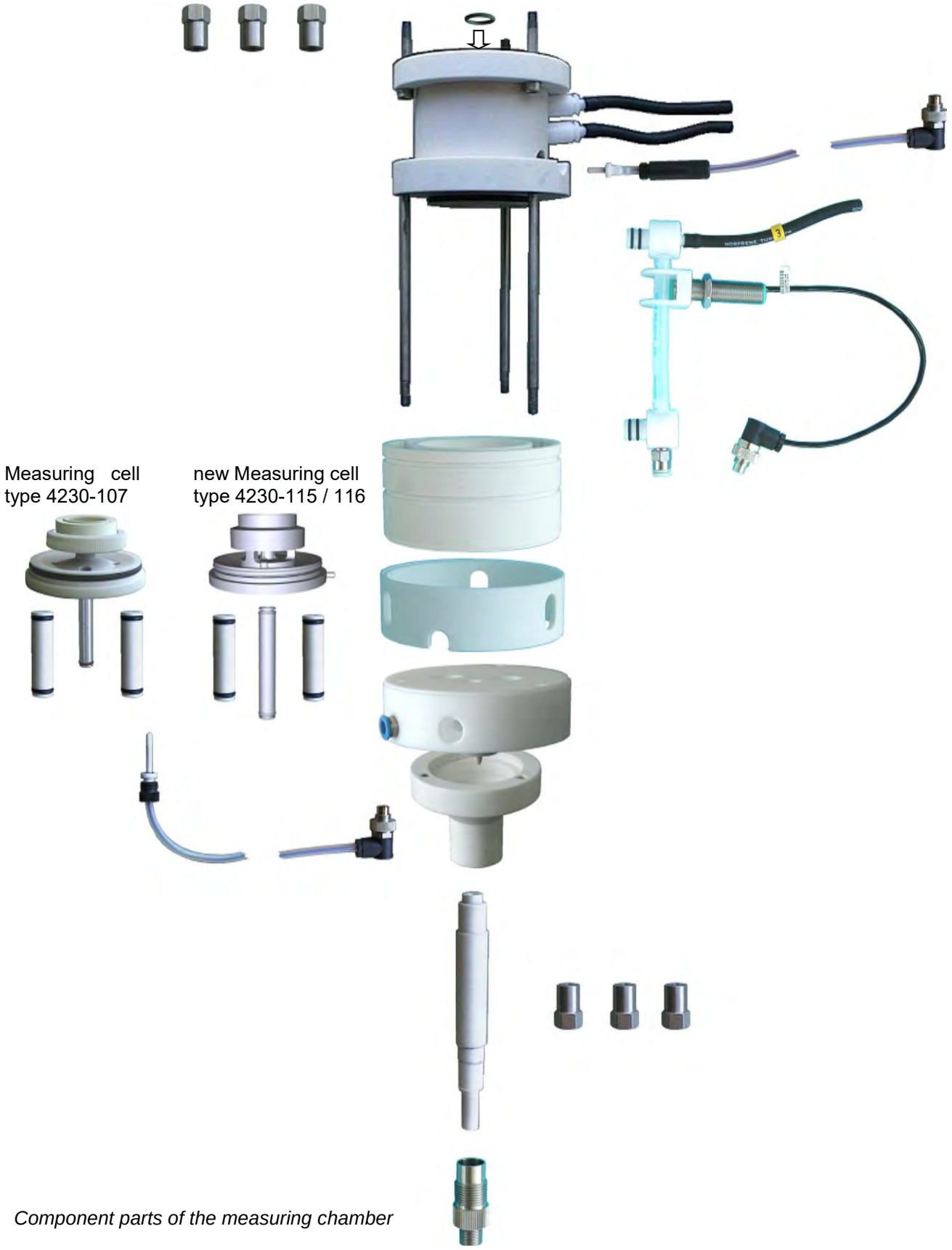

Component parts of the measuring chamber

6.3.8 Assembling the measuring chamber

Once parts have been cleaned or exchanged, the measuring chamber is assembled again by reversing the steps taken to disassemble it.
Please observe the following instructions during assembly.

- The measuring chamber can only be assembled if the component parts are in the right positions.
- When inserting the measuring cell into the middle section of the measuring chamber, make sure that the pin on the measuring cell snaps into place in the slot on the enclosure.

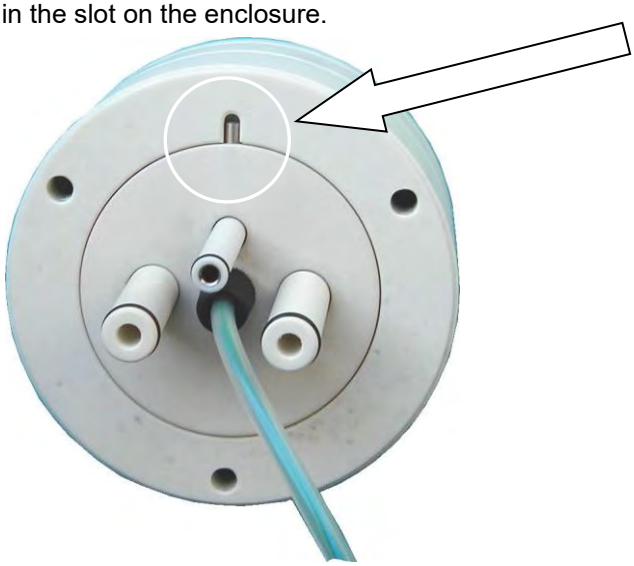

- Check all silicone hoses prior to reassembly. If they are no longer elastic and dimensionally stable, they must be replaced. Replacement hoses can be found among the accessories. Should you require more, you can order replacement hoses (see list of spare parts).
- Make sure that the air pressure measurement hoses are connected correctly. The hoses must not be twisted or bent.
- Make sure that all O-rings are inserted correctly into the relevant slot and that they don't cant during assembly.
- Make sure that the water detector's mount is located in the two enclosure slots.

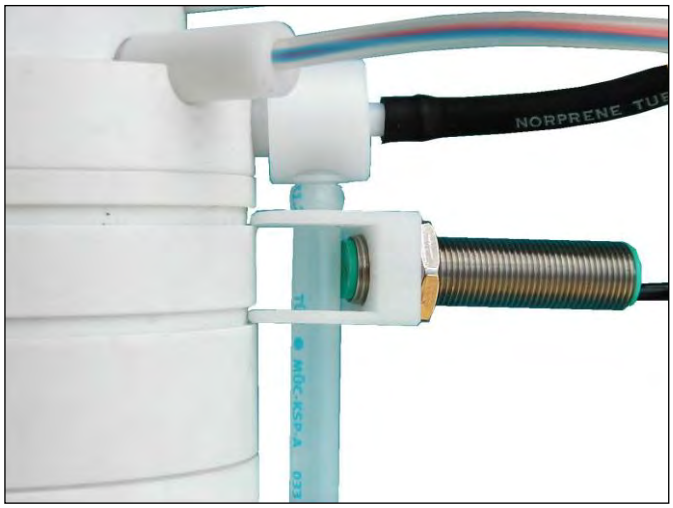

- Put the assembled measuring chamber back in the enclosure and tighten the upper mounting nuts.
- Insert the ejector outlet through the enclosure from the bottom and push it into the lower section of the measuring chamber.
- Then screw on the outlet connection (knurled screw) and thereby press the ejector outlet right into the lower section of the measuring chamber.
- Restore all hose and cable connections.

6.4 Internal water detector

If the internal water detector ceases to respond, you can carry out a calibration.
Disassemble the water detector.

- Detach the plug-in connector (detach the knurled nut and remove the connector)
- Loosen the lock nut (A/F 17) and screw the water detector out of the mount.

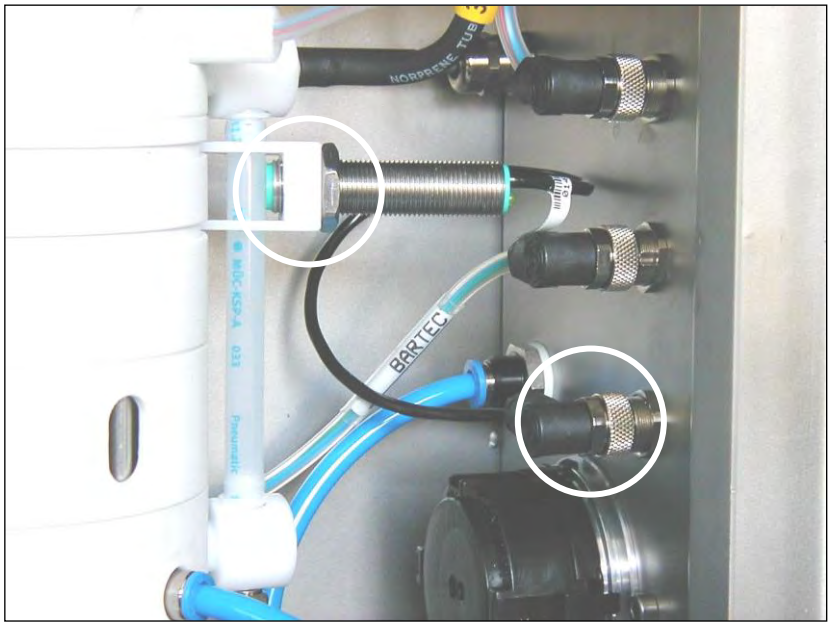

- Half-fill a plastic hose with water.
- Hold the water detector's sensor up to the unfilled part of the hose. The LED on the water detector must be off.
- Then hold the water detector's sensor up to the filled part of the hose. The LED on the water detector should now light up.
- If necessary, use the small screwdriver provided to turn the screw for setting the sensitivity (on the back of the water detector) clockwise until the LED on the filled part of the hose lights up.
- If the LED on the filled part lights up, turn the sensitivity setting screw slowly anticlockwise until the LED is off. Then turn the sensitivity setting screw back clockwise until the LED lights up. Then turn the sensitivity setting screw clockwise about half a round further.
- Following reassembly, test that the water detector works properly by draining the water from the measuring cell – the LED should be off. When the unit is switched on, the LED should light up as soon as the correct level is restored.

If you use a new water detector, calibrate it prior to assembly in the same way.

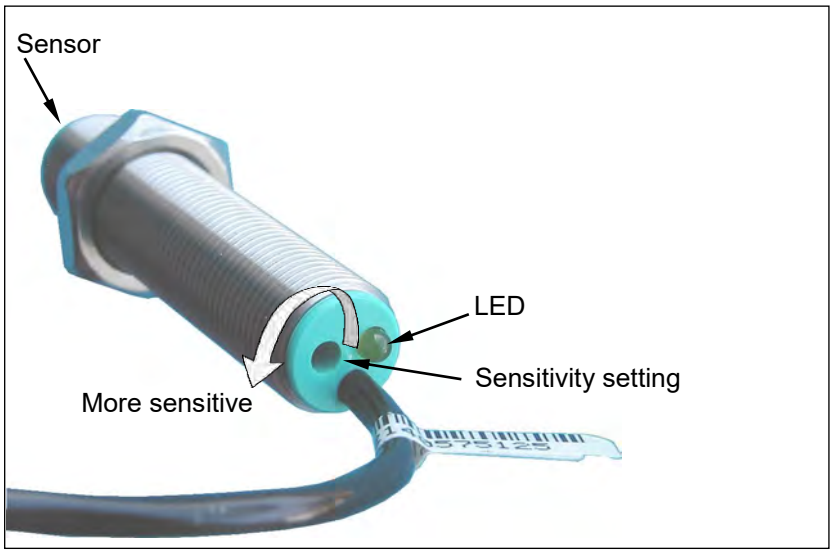

6.5 Water pump

The water is pumped from the storage tank to the measuring cell using a peristalsis hose pump.
The pump can be changed quite easily when required.

- Detach the two hose connections (press the blue catch and extract the hose with the nipple).
- Then squeeze the two catches on the pump body together and remove the pump from the shaft.
- Remove the two hoses from the nipples.
- Insert the new pump by doing the opposite.

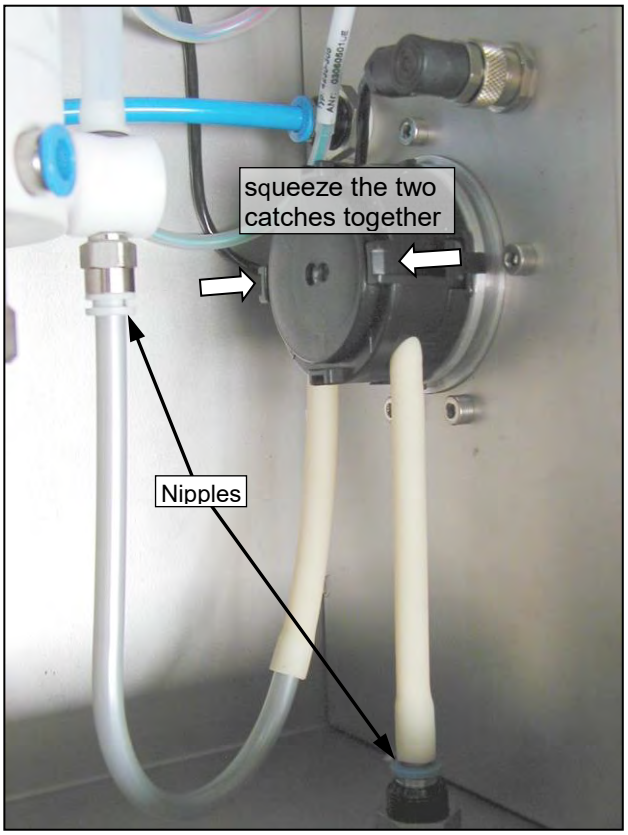

6.6 Gas sampling hose

The gas sampling hose does not usually require any maintenance. The inner hose is made of a material that hardly any dirt clings to.

In the case of irregular system operation, for example if there is air flow rate while the measuring system is switched off, dirt may collect in the hose. Such dirt then occurs in the form of condensation that attracts dust and deposits itself on the cold hose. The layer of dirt can block the gas sampling hose.

The hose can be rinsed using water or other solvents. Any solvent that does not corrode the material can be used.
During cleaning, the hose can briefly be subjected to temperatures of up to 200 °C and pressures of up to 50 bar.

The gas sampling hose should only be cleaned mechanically if all other means are unsuccessful. In doing this, however, utmost care must be taken not to damage the inner HYPALON hose.

6.7 Compressed air conditioner

The only maintenance required for the compressed air conditioner is emptying and cleaning the condensate separator and occasionally cleaning the filter.

6.7.1 Emptying the condensate separator

For Emptying the condensate separator press the small red button at the drain valve. Use a jar to collect the condensate to avoid your clothes and environs of the equipment getting polluted.
Observe the mark that shows the maximum level of the condensate separator.

6.7.2 Cleaning the filter

Depressurize the pipe before removing the condensate separator!

- Press the ratchet lever down and turn the condensate separator 45° to the left or to the right.

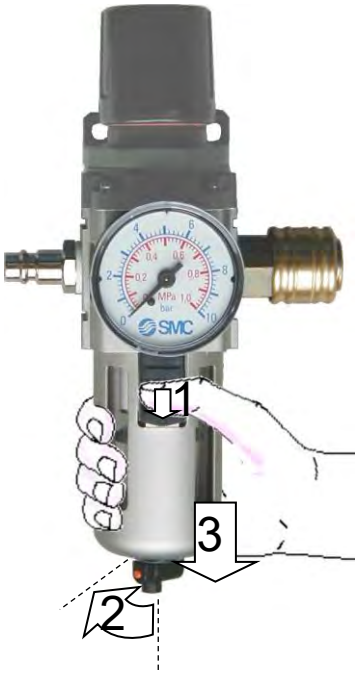

Pull the condensate separator down to remove it. Rinse the condensate separator carefully using this opportunity. If there is a coating at the inner surface, clean the condensate separator with a brush and a neutral cleaning agent.

- Turn the filter holder approx. 30° anticlockwise and remove it downwards.

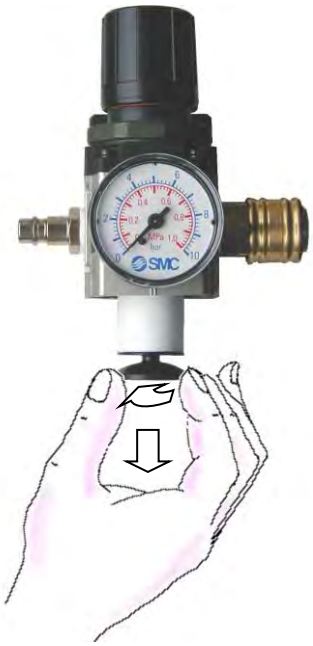

- Remove the filter downwards.

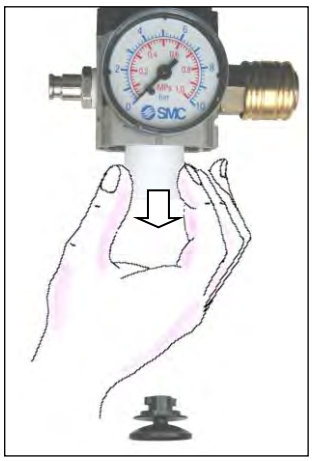

- Clean the filter.

Only use water for cleaning. **Do not use alcohol or any aggressive chemicals**!

If you notice that the filter is damaged or extremely contaminated use a new one please.

- Insert the cleaned or a new filter.
- Insert the filter holder an fix it by turning it clockwise.
- Attach the condensate separator. The mark at the upper flange meets the mark at the valve housing.

- Press the condensate separator upwards into the valve housing and turn it in any direction until the ratchet lever locks.

6.8 Pressure reduction controller

Please follow the attached service instructions to service the pressure reduction controller, e. g. cleaning or changing the filter.

6.9 Changing fuses

The two fuses are located in the electronics enclosure (door on the right).

- Press in the fuse holder using a screwdriver and turn it a little anticlockwise.

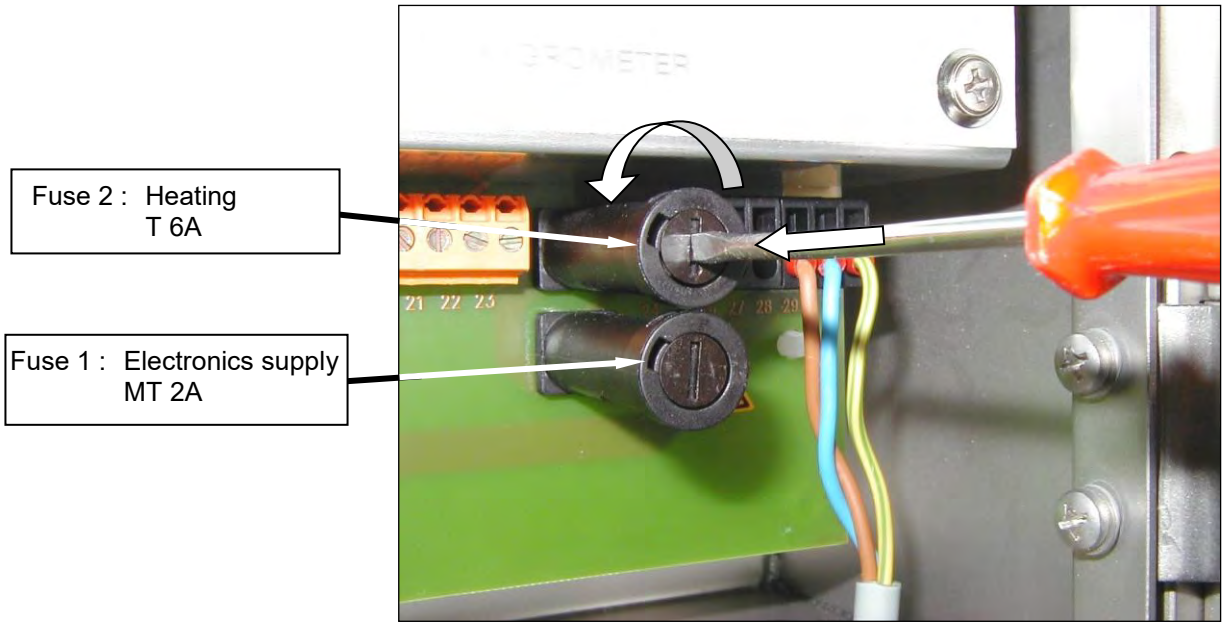

- Extract the fuse holder and exchange the fuse.
- Insert the fuse holder together with the new fuse and lock it again by turning it clockwise.

6.10 Replacing the Display-/ Profibus-board

- Disconnect the device from power supply before starting any work at the electronics.
- Observe the safety precautions according to chapter 2.
- Disconnect the two connectors and unscrew the four attachment screws.

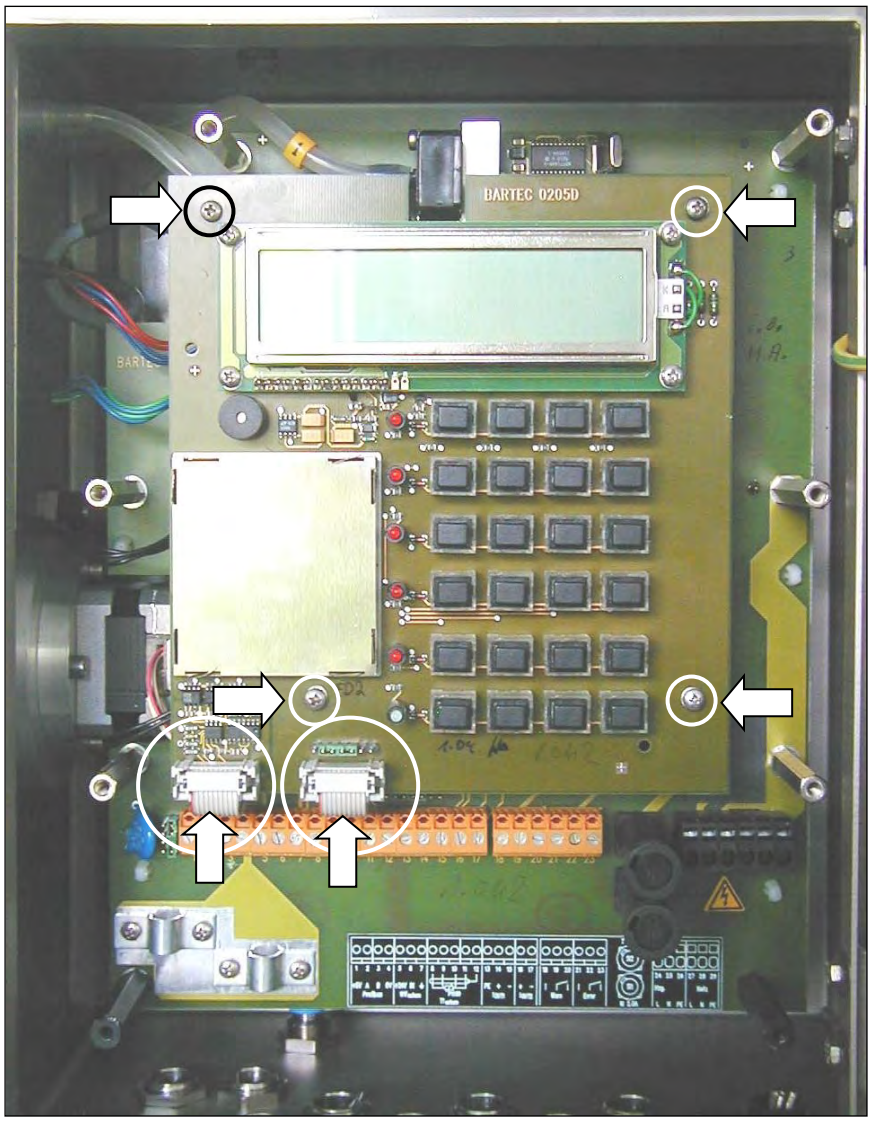

- Take the board carefully out and insert the replacement board.
- Fix the board with the four screws and reconnect the two connectors.

6.11 Replacing the electronics board

- To replace the electronics board you must first dismount the display-/ profibus-board. Follow the instructions according to section 6.10 to this.

To avoid mistakes when reassembling you should note the positions of all connections or mark them distinctive.

- Disconnect all cables and connectors.
- Disconnect the three pressure hoses carefully.
- Unscrew the seven attachment bolts.

Attention! Do **not unscrew** the black plastics bolt in the bottom right corner. It fixes components behind the board.

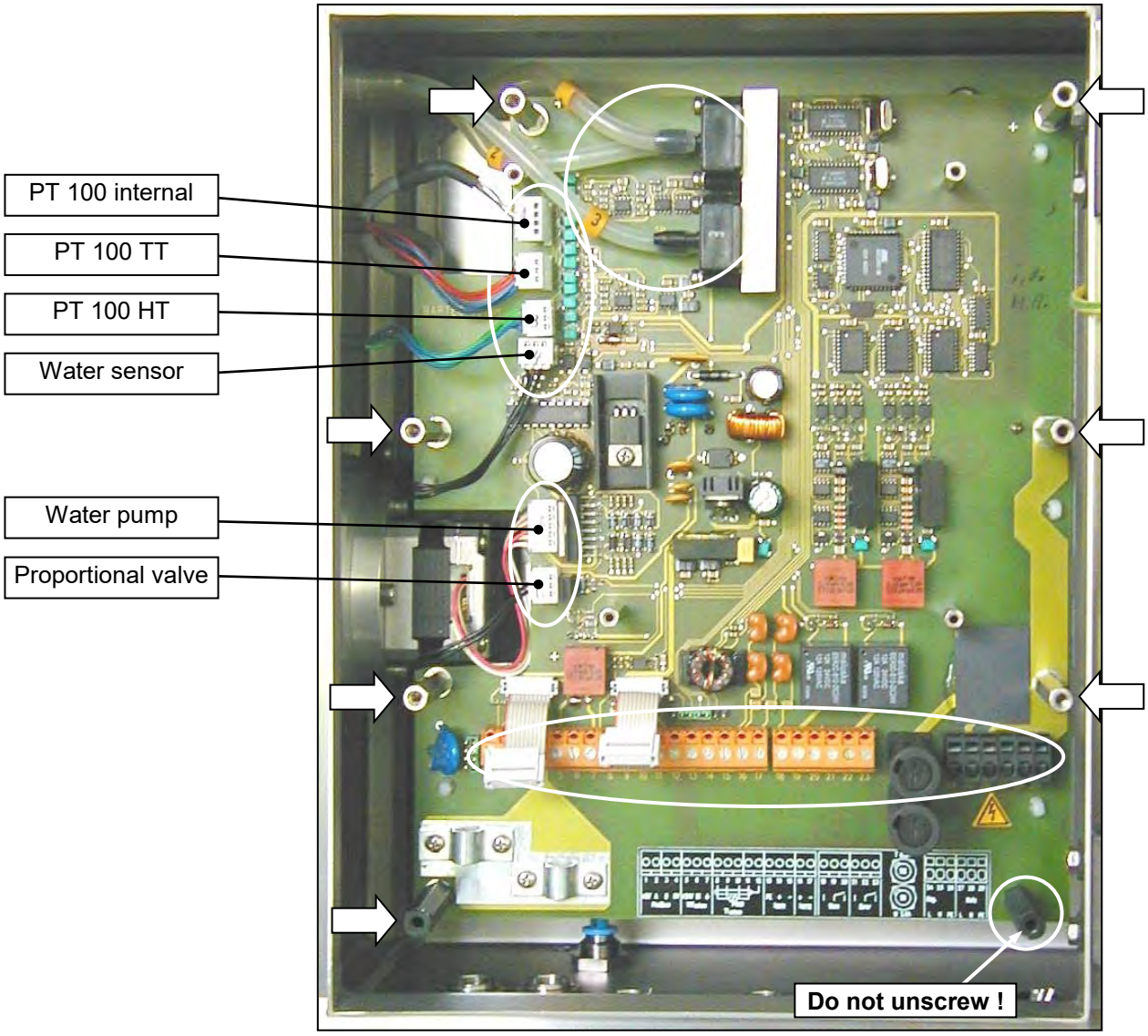

- Take the board carefully out and insert the replacement board.
- Fix the board with the four screws and reconnect all cable connections.

- Connect the pressure hoses to their nipples according to the figure below.

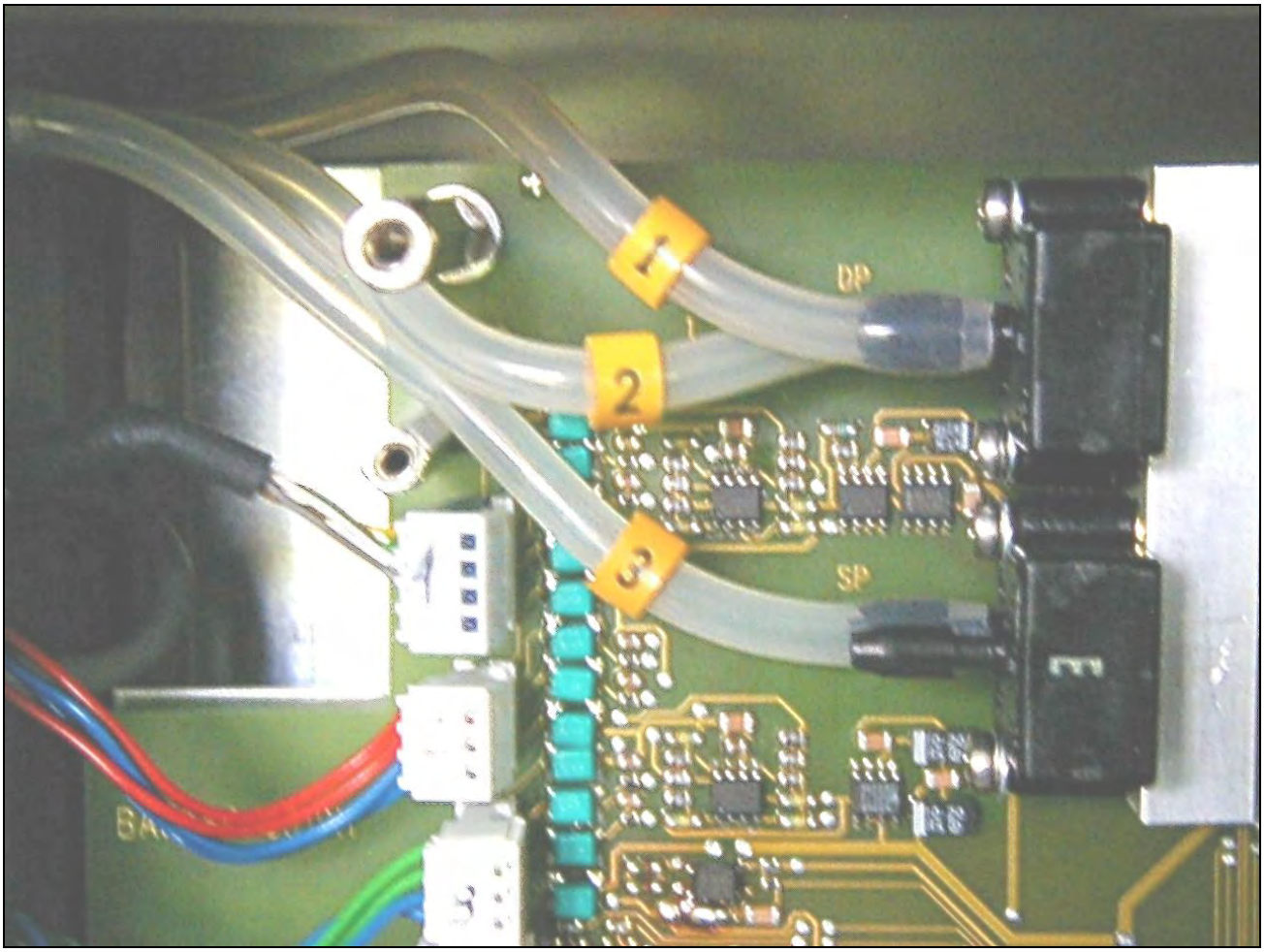

- Reassemble the display-/ profibus board according to section 6.10.

6.12 Replacing the proportional valve

- First dismount the display-/ profibus-board and the electronics board (follow the instructions according to section 6.10 and 6.11).
- Disconnect the two blue hoses from the proportional valve
- For this press in hose catch at the nipple and pull out the hose at the same time.
- Unscrew the two allen screws and take the valve out.
- Insert the new proportional valve and fix it with the two screws.
- Connect the two hoses to their nipples.
- Reassemble the display-/ profibus board and the electronics board.
- Connect the plug of the proportional valve to the electronics board (see page 84).

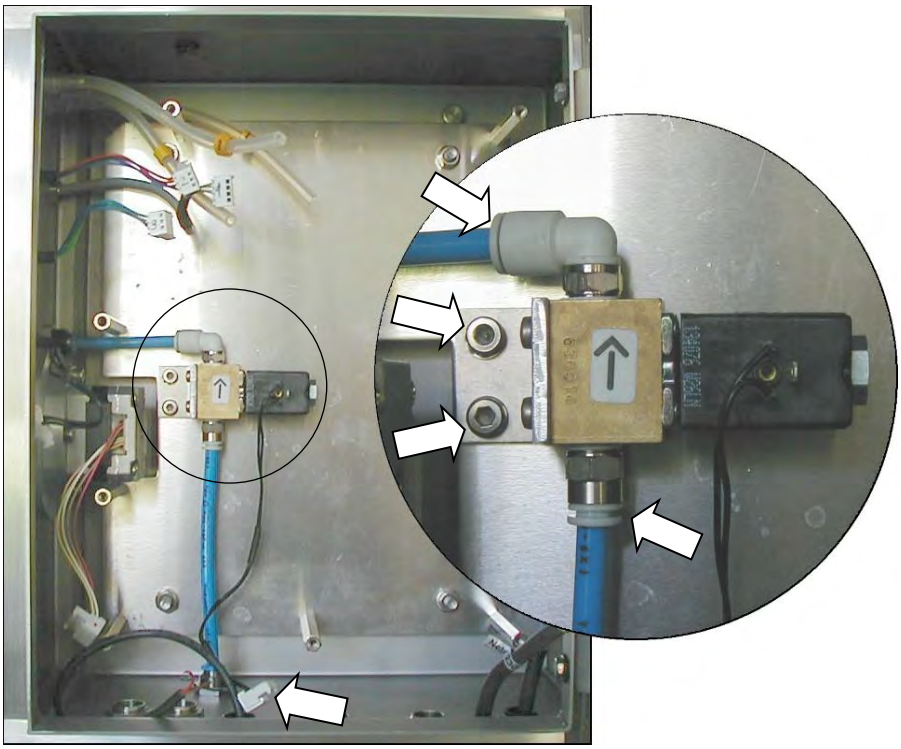

7 Error and warning messages

While HYGROPHIL® H is being operated, messages are output on the display and the ERROR-LED lights up whenever faults occur and whenever operating values exceed or fall below the required values. In addition, either the error relay or the warning relay is activated.
The table below lists all the messages that may be output during operation, describes possible causes and provides recommendations for rectifying faults. Faults which directly affect the measuring operation will be signalled by activating the ERROR-Relay. The values at the analogue outputs will be „frozen“.
Should any faults occur that you cannot rectify yourself, please contact the service centre.

Message	**Relay**	**Causes**	**Actions**
BASIS NO ANSWER		Internal equipment fault	Notify the service centre
SYSTEM O.K.		The equipment is ready to work	
STANDBY !!	Warning relay	The equipment is in standby mode	
TIMEOUT	Error relay	A fault occurred for longer than the programmed TIMEOUT time	• Determine fault (display message) • Remedy cause • Restore measurement operation (restart)
WATER-ERROR !!	Error relay	Internal water detector reports error. The level in the measuring chamber is too low for more than 20sec.	• Check water reserve and replenish if necessary • Check level in the riser, eliminate blebs by slight knocking • Check all hoses • Check Tube pump cartridge on wear, replace it if necessary • Check water pump • Check water sensor, or calibrate it (see section 6.4)
	Warning relay	External water detector reports error. The level in the water tank has reached the minimum value.	• Top up with water • In case of sufficient water check water sensor or calibrate it (see section 3.8)
FLOW TOO LOW !!	Warning relay	The air flow rate is currently too low (ΔP<650 Pa). The proportional valve opens.	Wait until the end of the control process If the control range is insufficient, the message FLOW MIN !! is output

Message	Relay	Causes	Actions
FLOW MIN !!	Error relay	Although the proportional valve is fully open, too little air is being pumped through the measuring chamber. („open error“ see section 8.3.1 DaAdr$0A, Bit 8 and Bit 16)	Upon start-up: • Increase admission pressure at the reducing valve (up to a maximum of 5 bar) • Check the negative pressure at the extraction point; operation is no longer possible at a vacuum pressure of < -250 hPa During measurement operation: • Check the compressed air supply • Clean the filter • Check whether the suction line is blocked • Check the measuring chamber and clean if necessary • Check all hose connections • Check the ejector; air must be free to leave at the ejector outlet • If there is a discharge duct, check whether it is clear
FLOW TOO HIGH !!	Warning relay	The air flow rate is currently too high (ΔP>650 Pa). The proportional valve closes.	Wait until the end of the control process If the control range is insufficient, the message FLOW MAX !! is output
FLOW MAX !!	Error relay	Although the proportional valve is fully closed, too much air is being pumped through the measuring chamber. („close error“ see section 8.3.1 DaAdr$0A, Bit 9 and Bit 17)	Upon start-up: • Pressure at the extraction point too high; operation is not possible without special measures • Select a different extraction point, e.g. change from the pressure side to the suction side for blowers • Take suitable throttling measures, taking into account the risk of dirt at the throttling point During measurement operation: • Clean the venturi nozzle • Check the connecting hoses • Have the service centre check the pressure pick-up
TT TOO LOW !!	Error relay	The gas sampling hose temperature is temporary too low.	• wait till the regular operating conditions appear
TT TOO HIGH !!	Error relay	The gas sampling hose temperature is temporary too high.	• wait till the regular operating conditions appear
OUTRANGE T1 ext !!	Warning relay	The external measured temperature $T1_{external}$ is lower than 0 °C or higher than 200 °C“.	• Check ambient conditions. • Check the sensor and its connection for short circuit or interruption.
OUTRANGE T int !!	Warning relay	The internal measured temperature $T_{internal}$ is lower than 0 °C or higher than 100 °C“.	• Check the sensor and its connection for short circuit or interruption

Message	Relay	Causes	Actions
OUTRANGE SP !!	Warning relay	The pressure pick-up for the measuring chamber is not delivering plausible values (<500 hPa or > 1500 hPa)	• Read the value for SP (SP key) and compare it with the external barometer if appropriate • If the compressed air is switched off, the pressure should adjust to the prevailing ambient barometric pressure • Make a note of the result and consult the service centre.
OUTRANGE HT !!	Warning relay	HT is lower than 0 °C or higher than 150 °C	• Check HT sensor and its connection for short circuit or interruption • If the sensor is defective → replace it
OUTRANGE DT !!		No fault at the device! The Dew point is lower than -25 °C or higher than 100 °C	
UNDERRANGE A1 (A2)	Warning relay	No fault at the device! Warning when measurand is too low. The value for analogue output A1 (A2) is lower than the lower measuring range limit	• Check conditions at the sampling position. • Check programming (menu PRG.-OUTPUT)
OVERRANGE A1 (A2)	Warning relay	No fault at the device! Warning when measurand is too high. The value for analogue output A1 (A2) is higher than the upper measuring range limit	• Check conditions at the sampling position • Check programming (menu PRG.-OUTPUT)
LOW LIMIT-ERROR	Warning relay	No fault at the device! The measurand is lower than the programmed low limit.	• Check conditions at the sampling position. • Check programming (menu SET LIMITS)
HIGH LIMIT-ERROR	Warning relay	No fault at the device! The measurand is higher than the programmed high limit.	• Check conditions at the sampling position. • Check programming (menu SET LIMITS)
OUT OF RANGE	Error relay	The values calculated with TT and HT are unreal. All calculated values are set to „0“.	• Wait till the working conditions are established after switching on. • Check TT and HT sensor. • Check pressure in the measuring chamber (SP)
HOSE ERROR !!	Error relay	Fault at the gas sampling hose	• Check hose heating connection • Check hose heating for defects • Consult the service centre • Check fuse

If a measurement value or arithmetic value lies above or below the value defined in the SET LIMITS menu, the warning relay is activated and the „Fault“ LED lights up. The current measurands are present at the analog output.
In the following cases will the last measured values be kept („frozen“) at the analog outputs:

1. at all ERROR messages, when the Error relay is activated
2. in standby mode.

8 PROFIBUS

HYGROPHIL H 4230 contains a certified PROFIBUS DP interface. All field bus-specific equipment data is listed in the GSD file „BARx077D.gsd“. The file is supplied with the product on a storage medium. The module specified there for I/O allows the user to request data by handshake.

8.1 Framework structure

The framework structure must comply with the following guidelines:

Byte 0 Command code / status code	**Byte 1** Reserved	**Bytes 2/3** Data address high/low	**Bytes 4/5** Offset high/low	**Byte 6** Length of the data	**Byte 7** Reserved	**Bytes 8...15** User data

Byte 0, command code / op code

This is where the command code is shown for queries and the status code is shown for responses from the measuring unit.

Input: 0x01 Write
0x02 Read

Output: In the case of responses from HYGROPHIL, additional equipment information is transmitted in the status code:

Bit 7: 1 = Master’s query was a read access
Bit 6: 1 = Master’s query was a write access
Bit 5: Reserved
Bit 4: 1 = Hardware error
(please notify the customer service)
Bit 3: Reserved
Bit 2: Reserved
Bit 1: 1 = Equipment is in standby mode
Bit 0: 1 = A log error has occurred – please check your entry!

Byte 1, reserved

Bytes 2/3, data address high/low

Input: The data address of the desired value is in the channel description (see section 8.3)
(e.g. dew point corresponds to 0x20 hex → entry: byte 2: 0x00, byte 3: 0x20).

Output: When the data is input, the data address desired for the query is entered here.

Bytes 4/5, offset high/low

Input: The offset of a variable is to be taken from the channel description for the equipment (see section 8.3).
Example: a read operation to data address 0x0020 with an offset of 0x0000 would deliver the dew point, whereas an offset of 0x0004 would address the measured value for the relative humidity (see channel description).

Output: The offset of the queried variable is returned.

Byte 6, length of the data

Input: This byte determines the number of items of data to be read or written (max. 8).

Length of the individual data types:
Float → 4 bytes
Char → 1 byte
Integer → 2 byte (short int)
Long → 4 bytes

Example: In order to read the dew point, 4 bytes must be requested.

Output: The number of items of user data written or to be read is coded in this byte.

Byte 7, reserved

Bytes 8-15, user data

Input: In the case of a write process, the data to be written must be submitted here. This is usually not more than 4 bytes.

Output: The read process delivers the requested user data here.
Example: The dew point was submitted with the other data in IEEE 754 format.

8.2 Standby mode

If the equipment is not being used, it can be changed to this mode. In the process, the DP target pressure is fixed at 100 Pa and the pump data is reduced by a factor of 10. The heating is left on.

Activating standby:
Write 0x50 (1 byte) to the address 0x0A (offset 0)

Deactivating standby:
Write 0x05 (1 byte) to the same address.

This mode is also displayed in the status code (bit 1) and can also be activated or deactivated using the keyboard (F5 key).

While the equipment is in standby mode, the measured data must be rejected!

8.3 Channel description

8.3.1 Service channel

DaAdr (hex)	Identifier	Memory type	Read-out	Format
$03	Reset	RAM read/write	hex	Char
$0A	Status field	RAM read	bin. or hex	Long
$0B	Standby mode	RAM read/write	hex	Char

DaAdr $03: Reset

Format: char

Writing 0xFF triggers reset on the entire equipment (including PROFIBUS interface)

DaAdr $0A: Status field

Format: long

Bit 0: DT low
Bit 1: DT high
Bit 2: TT low
Bit 3: TT high
Bit 4: DP low (flow too low)
Bit 5: DP high (flow too high)
Bit 6: HT low
Bit 7: HT high
Bit 8: Open error (proportional valve cannot open any further)
Bit 9: Close error (proportional valve cannot close any further)
Bit 10: Error in external water detector
Bit 11: Error in internal water detector
Bit 12: Hose error
Bit 13: Error timeout
Bit 14: Reserved
Bit 15: Equipment in standby mode
Bit 16: Flow min
Bit 17: Flow max
Bit 18: $T1_{external}$ out of range
Bit 19: $T_{internal}$ out of range
Bit 20: SP outrange
Bit 21: Reserved
Bit 22: Reserved
Bit 23: Out of Range
Bit 24: Analog output 1 underrange
Bit 25: Analog output 1 overrange
Bit 26: Analog output 2 underrange
Bit 27: Analog output 2 overrange
Bit 28: LOW LIMIT ERROR
Bit 29: HIGH LIMIT ERROR

DaAdr $0B: Standby mode

Format: char

Equipment changes to standby mode with 0x50.
Return to normal operation with 0x05.

8.3.2 Measured value channel

DaAdr (hex)	Identifier	Memory type	Read-out	Format
$10	Measured values	RAM read/write	dec	Float [0]
$16	Preset SP	EEPROM read/write	dec	Float
$17	Preset $T1_{external}$	EEPROM read/write	dec	Float
$19	Activate $T1_{external}$	EEPROM read/write	hex	Char

DaAdr $10: Measured value

Format: Array [1...6] of Float

Order of the measured values:

Designation	Identifier	Offset	Unit	Measurement range
Dry temperature	TT	0	°C	0...150 °C
Humid temperature (compensated)	HT comp	4	°C	0...100 °C
Station pressure	SP	8	hPa	0...1500 hPa
Differential pressure	DP	12	Pa	0...3000 Pa
External temperature	$T1_{external}$	16	°C	0...200 °C
Internal temperature	$T_{internal}$	20	°C	0...100 °C

DaAdr $16: Preset SP

Format: Array [1...6] of Float

Before you can write this variable you must first change to standby mode.

Preset value for the station pressure; serves as the basis for calculating the humidity if the preset in channel $29 is activated.
(Default: 1013 hPa)

DaAdr $17: Preset $T1_{external}$

Format: Array [1...6] of Float

Before you can write this variable you must first change to standby mode.

Preset value for the external temperature; serves as the basis for calculating $RH_{external}$ if the preset in channel $28 is activated.
(Default: 25 °C)

DaAdr $19: Activate $T1_{external}$

Format: Char

Before you can write these variables you must first change to standby mode.

0x80 = $T1_{external}$ is determined, and $RH_{external}$ at the same time
0x00 = $T1_{external}$ is not determined

8.3.3 Arithmetic value channel

DaAdr (hex)	Identifier	Memory type	Read-out	Format
$20	Arithmetic values	RAM read	dec	Float[9]
$28	Use preset $T1_{external}$ value	EEPROM read/write	hex	Char
$29	Use preset SP value	EEPROM read/write	hex	Char

DaAdr $20: Arithmetic value

Format: Array [1...9] of Float

All arithmetic values in the following order:

Designation	Identifier	Offset	Unit	Measurement range
Dew point	DT	0	°C	0...100 °C
Relative humidity	RH	4	%	0...100%
Partial water vapour pressure	VP	8	hPa	1500 hPa
Mixing ratio	MH	12	g/kg	1000000 g/kg
Specific humidity	SH	16	g/kg	1000 g/kg
Enthalpy	H	20	kJ/kg	1000000 kJ/kg
Saturation deficit	DVP	24	hPa	5000 hPa
Relative humidity due to $T1_{external}$	$RH_{external}$	28	%	0...100%
Volumetric water content in %	Vol%	32	%	0...100%

DaAdr $28: Use preset $T1_{external}$ value

Format: Char

Before you can write this variable you must first change to standby mode.

0x80 = In place of a measured $T1_{external}$ value, the specified value of DaAdr$17 preset $T1_{external}$ will be included in the calculation.
0x00 = Preset $T1_{external}$ deactivated (default)

DaAdr $29: Use preset SP value

Format: Char

Before you can write these variables you must first change to standby mode.

0x80 = In place of a measured SP value, the specified value of DaAdr$16 preset SP will be included in the calculation.
0x00 = Preset SP deactivated (default)

8.3.4 Output channel

DaAdr (hex)	Identifier	Memory type	Read-out	Format
$31	OutputControlStatus	RAM read	hex	Char[3]
$36	Setpoint@	RAM read	dec	Float[3]
$39	OutputChConfig	EEPROM read/write	hex	Record[3]
$3B	Fullscale	EEPROM read/write	dec	Float[3]
$3C	Zeropoint	EEPROM read/write	dec	Float[3]

DaAdr $31: OutputControlStatus

Format: Array [1...3] of Char

7	6	5	4	3	2	1	0
Value OK	SignalHigh	SignalLow	Free	Free	Free	Free	Free

Value OK: 1 = Value at analogue output within specified limits
0 = Value at analogue output outside valid range

SignalHigh: 1 = AnalogOut > 100%
0 = AnalogOut ≤ 100 %
SignalLow: 1 = AnalogOut < 0%
0 = AnalogOut ≥ 0 %

The messages *SignalHigh...LevelLow* can be activated and deactivated using the corresponding enable bits (DaAdr $39).

DaAdr $36: Setpoint@

Format: Array [1...2] of Float

The value assigned to the analogue output (dimension according to table $10 or $20).

DaAdr $39: OutputChConfig*

Format:	Array [1...2] of Record	Output1	Output2
	EnableBits:	Char (*Offset = 0*)	Char (*Offset = 4*)
	FunctionBits:	Char (*Offset = 1*)	Char (*Offset = 5*)
	SetpointNo:	Char (*Offset = 2*)	Char (*Offset = 6*)
	ErrorState:	Char (*Offset = 3*)	Char (*Offset = 7*)
	End;		

Before you can write this variable you must first change to standby mode.

EnableBits:

Settings for various checks and error relevance, etc.

7	6	5	4	3	2	1	0
Free	HighAlarm	LowAlarm	Free	Free	Free	Free	Free
0 Default	1	1	0	0	0	0	0

Functions:
$00 = Output disable
$10 = Current output 0...100%: 4-20 mA
$20 = Current output 0...100%: 20-4 mA
$30 = Current output 0...100%: 0-20 mA
$40 = Current output 0...100%: 20-0 mA
Default = $10

SetpointNo:
Index for selecting the output variable 0...15, based on the table in DaAdr $10 and further with the table in DaAdr $20
e.g. SetpointNo = 2 => SP appears at the analogue output

Default Setpoint[1] = 6(DT), Setpoint[2] = 7 (RH), Setpoint[3] = 8 (VP);

ErrorState:

Behaviour of the analogue outputs when equipment errors occur:

7	6	5	4	3	2	1	0
Free	Free	OutEnd+1	OutStart-1	Free	Free	OutEnd	OutStart
0 Default	0	0	0	0	0	0	0

OutStart: 1 = 0mA at 0...20mA, 4mA at 4...20mA,
20 mA at 20...4mA or 20...0mA

OutEnd: 1 = 20mA at 0...20mA or 4...20mA,
4 mA at 20...4mA, 0mA at 20...0mA

OutStart-1: 1 = 0mA at 0...20mA, 3mA at 4...20mA,
21 mA at 20...4mA or 20...0mA

OutEnd+1: 1 = 21mA at 0...20mA or 4...20mA,
3 mA at 20...4mA, 0mA at 20...0mA

DaAdr $3B: Fullscale
Format: Array [1...2] of Float

Before you can write this variable you must first change to standby mode.

Setpoint value that corresponds to 100% in the output.

Default:

Setpoint [x]	Designation/unit	Value
1	DT/°C	100
2	HT/°C	100

DaAdr $3C: Zeropoint
Format: Array [1...2] of Float

Before you can write this variable you must first change to standby mode.

Setpoint value that corresponds to 0% in the output.

Default:

Zeropoint [x]	Designation/unit	Value
1	DT/°C	0
2	HT/°C	0

8.3.5 1-channel parameters

DaAdr(hex)	Identifier	Memory-Type	Read-out	Format
$40	Heating_w	EERPOM read/write	dec	Float
$41	Heating_xp	EERPOM read/write	dec	Float
$42	HeatingControlStatus	RAM read/write	-----	Record
$46	ErrorTime	EEPROM read/write	dec	Integer
$47	HT ohne Komp	RAM read	dec	Float
$48	T2KorrektConfig	EEPROM read/write	dec	Char
$4C	Timeout Aktivierung	EEPROM read/write	hex	Char

DaAdr $40: Heating_w
Format: Float

Before you can write this variable you must first change to standby mode.

Setpoint value w for the hose heating control (actual value =TT).
Default = 120°C

DaAdr $41: Heating_xp
Format: Float

Before you can write this variable you must first change to standby mode.

Proportional range xp in %.
Default = 3%

DaAdr $42: HeatingContolStatus

Format: Record
Statuschar: Char;
dummy; Char;
ON time; Integer;
OFF time; Integer;
End;

Statuschar:

7	6	5	4	3	2	1	0
ON	Errortimeout	Control bit for control	HoseError	Free	D limit	PID active	I limit

ON: 1 = Controller is switched on and working
0 = Controller off

Errortimeout: 1 = Error-tolerant period expired
0 = Equipment in normal operation

Control bit for control (function display for heating)
1 = Heating is currently activated
0 = Heating is currently not activated

HoseError: 1 = Fault (short circuit, interruption) on the hose heating
0 = Hose heating OK

D-limit: 1 = D component limit exceeded
0 = D component OK

PID-active: 1 = PID controller active, i.e. xp range reached
0 = P control

I-limit: 1 = I component limit exceeded
0 = I component OK

ON time: Time in ms during which the hose heating is switched on.

OFF time. Time in ms during which the hose heating is switched off.

DaAdr $46: ErrorTime

Format: Integer

Before you can write this variable you must first change to standby mode.

Switch-off time (0...3599) after an error occurs that makes regular measurement operation impossible.
No switch-off at 9999s.

Default = 1200s

DaAdr $47: HT without comp

Format: Float

HT with or without compensation.
HT measured value in °C, measurement range: 0...100 °C.

DaAdr $48: T2 correct config

Format: Char

Before you can write this variable you must first change to standby mode.

0x00 = No correction of HT based on the T2 measurement
0x80 = HT is corrected based on T2 (internal temperature) (default)

DaAdr $4c: Timeout activating

Format: Char

Before you can write this variable you must first change to standby mode.

7	6	5	4	3	2	1	0
ON	free	free	free	free	free	free	free

ON: 1 = timeout monitoring active
0 = no timeout

8.3.6 2-channel parameters

DaAdr (hex)	Identifier	Memory-Type	Read-out	Format
$50	PropValveControlStatus	RAM read/write	hex	Record
$54	PumpControlStatus	RAM read/write	hex	Char
$55	PumpConfig	EEPROM read/write	hex	Char
$57	EquipmentControlStatus	RAM read/write	hex	Char
$58	EquipmentConfig	EEPROM read/write	hex	Char
$53	Limit Task config.	EEPROM read/write	hex	Char [2]
$5a	Limit LOW	EEPROM read/write	dec	Float
$5b	Limit HIGH	EEPROM read/write	dec	Float
$5c	DP Parameter	EEPROM read/write	hex/dec	Record

SWNo $50: PropValveControlStatus

Format: Record
Statuschar: Char;
ControlStatusChar: Char;
ON time; Integer;
OFF time; Integer;
End;

StatusChar:

7	6	5	4	3	2	1	0
ON	OpenError	CloseError	Free	Free	Free	Free	Free

ON: 1 = Controller is switched on and working
0 = Controller off

OpenError: 1 = Flow rate too low, valve cannot be opened any further
0 = Valve in working range < maximum

CloseError 1 = Flow rate too high, valve cannot be closed any further
0 = Valve in working range > minimum

ControlStatusChar:
Used to control the valve within the unit, especially to switch off the valve temporarily when errors occur. Overrides the PropValveConfig up to reset.

Control				Status			
7	6	5	4	3	2	1	0
ON	FullOpen	FullClose	Free	ON	FullOpen	FullClose	Free

ON: 1 = Controller is switched on and working
0 = Controller off

FullOpen: 1 = Valve completely open (Control) or opened (Status)
0 = No „FullOpen“

ON time: Time in µs during which the valve is activated.

OFF time. Time in µs during which the valve is not activated.

DaAdr $54: PumpControlStatus

Format: Char

7	6	5	4	3	2	1	0
ON	Pump on/off	FillMode Control	NormalMode Control	SM-Error	Free	FillMode Status	Nor-malMode

ON: 1 = The pump is switched on and running
0 = Pump not in operation

Pump on/off:
1 = Pump is currently active
0 = Pump is currently not active

FillMode Control:
1 = Pump is switched to fill mode
0 = No fill mode

SMError: 1 = Error in the stepper motor
0 = No error in the stepper motor

FillMode: 1 = Pump is running in the mode for filling the system
0 = No fill mode

NomalMode: 1 = Pump is running at the speed specified under PumpConfig
0 = No normal operation

DaAdr $55: PumpConfig

Format: Char

Before you can write this variable you must first change to standby mode.

Specification of the pump speed: default 25 -35

DaAdr $57: EquipmentControlStatus

Format: Char

7	6	5	4	3	2	1	0
Free	Free	ExternWater Error	Free	Free	Free	InternWater Error	Free

ExternWater: 1 = External level sensor reports „no water“

InternWater Error:
1 = Internal level control reports „no water“

If the corresponding inputs in EquipmentChConfig (DaAdr $4C) have not been released, the status bits are left at '0'.

DaAdr $58: EquipmentChConfig

Format: Char

Before you can write this variable you must first change to standby mode.

7	6	5	4	3	2	1	0
Free	Free	External water detector	Free	Free	Free	Internal water detector	Free
0 Default	0	0	0	0	0	1	0

Releases the corresponding monitoring of the water level.

DaAdr $53: Limit Task Config

Format: Char [2]

Char [1] : 0x00 = Limit monitoring <u>not</u> active
0x01 = Limit monitoring active

Char [2] : Value for the measurand to be taken over.

0	TT
1	HT
2	SP
3	DP
4	$T1_{extern}$
5	T_{intern}
6	DT
7	RH

8	VP
9	MH
10	SH
11	H
12	DVP
13	RH_{extern}
14	Vol%

DaAdr $5a: Limit LOW

Format: Float

Before you can write this variable you must first change to standby mode.

Lower value of the limit monitoring „LOW LIMIT“.
(Default: 0)

DaAdr $5b: Limit HIGH

Format: Float

Before you can write this variable you must first change to standby mode.

Upper value of the limit monitoring „HIGH LIMIT“.
(Default: 100)

DaAdr $5c: DP Parameter

Format: Record

Before you can write this variable you must first change to standby mode.

Propvalveconfig

7	6	5	4	3	2	1	0
ON	Free	Free	Free	Free	Free	Free	Free

ON: 1 = Proportional valve on
0 = Proportional valve off

DP-Setpoint Control parameter setpoint value for the differential pressure

DP-Range Control tolerance of the proportional valve, defines the limits for FLOW TOO LOW and FLOW TOO HIGH.

8.4 Examples

Two sample sequences will be used to illustrate how to read from HYGROPHIL H (querying the dew point) and how to write to HYGROPHIL H (changing to standby mode).

8.4.1 Reading from HYGROPHIL H

Querying the dew point

According to the channel description the dew point can be found at data address 0x20 with offset 0. Due to the fact that it is a float value, 4 bytes of information need to be requested.

Read request from the PROFIBUS master:

0x02	0x00	0x0020	0x0000	0x04
Byte 0 Command code	Byte 1 Reserved	Bytes 2/3 Data address	Bytes 4/5 Offset	Byte 6 Data length

Byte 0: Command code for a read process (Read = **0x02**)
Byte 1: Reserved (**must** always be **0x00**!!)
Data address from channel description:
Byte 2: **0x00**
Byte 3: **0x20** for dew point
Offset from channel description:
Byte 4: **0x00**
Byte 5: **0x00**
Length of the data requested:
Byte 6: **0x04** for 4 bytes

Response from HYGROPHIL:

0x80	0x00	0x0020	0x0000	0x04	0x00	0xXX
Byte 0 Status code	Byte 1 Reserved	Bytes 2/3 Data address	Bytes 4/5 Offset	Byte 6 Data length	Byte 7 Reserved	Bytes 8...11 User data

Byte 0: Status code for a successful **0x80** read access
Byte 1: 0x00 (reserved)
Data address from channel description:
Bytes 2/3: Data address of the requested value (here **0x0020** for dew point)
Offset from channel description:
Bytes 4/5: Offset of the requested value (here **0x0000** for dew point)
Length of the data transmitted:
Byte 6: **0x04** for the float value of the dew point
Byte 7: Reserved
Bytes 8...11: Float value of the dew point in line with IEEE 754 Floating Point Standard
Bit 0 of the first byte of the float is sent first.

8.4.2 Writing to HYGROPHIL H

Changing from normal operation to standby mode

According to the channel description you can change to standby mode by writing 0x50 to data address 0x0B.

Write request from the PROFIBUS master:

0x01	0x00	0x000B	0x00	0x01	0x00	0x50
Byte 0 Command code	Byte 1 Reserved	Bytes 2/3 Data address	Bytes 4/5 Offset	Byte 6 Data length	Byte 7 Reserved	Byte 8 User data

Byte 0: Command code for a write process (Read = 0x01)
Byte 1: Reserved (must always be 0x00!!)
Data address from channel description (standby mode → 0x000B):
Byte 2: 0x00
Byte 3: 0x0B
Offset from channel description:
Byte 4: 0x00
Byte 5: 0x00
Length of the data to be written:
Byte 6: 0x01 for 1 byte
Byte 7: Reserved (0x00)
Byte 8: 0x50 (coding according to channel description in order to change to standby mode)

Response from HYGROPHIL:

0x40	0x00	0x0005	0x0000	0x01
Byte 0 Status	Byte 1 Reserved	Bytes 2/3 Data address	Bytes 4/5 Offset	Byte 6 Data length

Byte 0: Status code for a successful 0x40 write access
Byte 1: Reserved
Data address from channel description:
Bytes 2/3: Data address of the written value (here 0x0005)
Offset from channel description:
Bytes 4/5: Offset of the requested value (here 0x0000)
Length of the data written:
Byte 6: 0x01 for 1 byte of written information

***