BARTEC

Data sheet

HYGROPHIL H 4230-12 process hygrometer Ex zone 2

Continuous humidity measurement in industrial processes.

For very high demands in terms of being resistant to corrosion and dirt.

Particularly suitable for cases where the air to be measured contains oil vapours, dust, water-soluble gases, solvents, acids and aggressive chemicals.

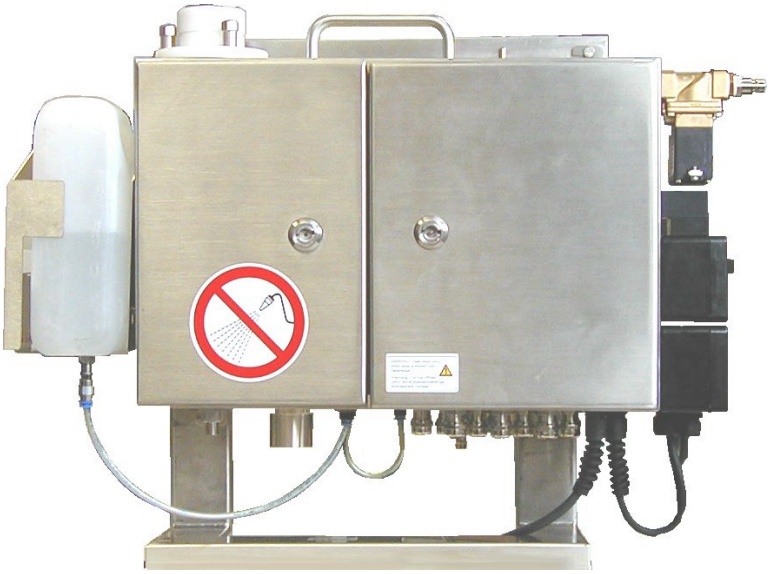

In many processes, monitoring and controlling gas humidity is a must if you want to achieve a consistently high product quality, use energy efficiently and adhere to the regulations regarding emission limits. **HYGROPHIL H 4230** is a special measuring device that continuously measures the humidity levels during industrial processes.
Thanks to the carefully chosen materials and constant scavenging, the system is especially suitable for cases where the air to be measured contains oil or fat vapour, solvents, water-soluble gases or salts.
Examples:
- Hot-air tunnels for cooking foodstuffs
- Fertiliser dryers
- Various chemical processes

It can even be used in cases where the air to be measured is highly contaminated with acids or other aggressive substances (such as sulphuric acid, hydrofluoric acid or nitrohydrochloric acid).
Examples:
- Copper-nickel works
- Large combustion plants
- Combined heating and power stations
- Waste incineration plants

In power stations, incineration plants, and other industrial facilities, the amount of water vapour can also be measured in non-purified flue gas immediately downstream of the filter. This allows you to detect not only pipe damage, but also hairline cracks in the heat exchanger.

The portable design is particularly suitable for mobile application at the facilities of test centres and agencies for monitoring plants and at energy information centres.

Thanks to the standard method used, HYGROPHIL H is also suitable for use as a reference device.

- **Measurement range: 20...100 °C DT**
- **rimary measurement variables: TT, HT, SP, aux. temperature**
- **Calculated measurement variables: DT, MH, SH, vol.%, VP, h, DVP**
- **Secondary standard method in accordance with DIN 50012**
- **1 additional temperature measuring circuit for PT100**
- **Current outputs 2x 0/4...20 mA electrically isolated**
- **ofibus DP field bus**

BARTEC BENKE GmbH, Schulstr. 30 , 94239 Gotteszell, Germany
Tel. +49 9929 301 0, Fax +49 9929 301 112, gotteszell@bartec.com, www.bartec.com

Technical data

Humidity measurement

Measurement principle	Psychrometric gas humidity measurement in line with the impact jet method
Transducer	PT 100/ 4-conductor in accordance with DIN IEC 751
Computational accuracy	≤ 0.01%
Computing time	Approx. 2s
Settling time	t_{90} = 90s (for sudden change in SH from 10 to 190 g/kg)
Air/gas throughput	Adjustable, max. 17,5 Nl/min
Water intake	Max. 25 ml/h (tube pump)
Water reserve	2l (enough for approx. 3 days)
Compressed air intake	2...5 bar (max. air consumption 2000Nl/h)

Measured variable inputs

Measured variable		Measurement range	Resolution	Accuracy	Type
Dry temperature	TT	0...140 °C	0.1 °C	≤ 0.5% of the measurement range	Primary
Wet temperature	HT	0...140 °C			
Temperature	T1	0...200 °C			
Absolute pressure	SP	500...1500 hPa	1 hPa	≤ 1%	
Dew-point temperature	DT	0...100 °C	0.1 °C		Calculated
Volumetric content H_2O	Vol.%	0...100 %	0.1 %		
Absolute humidity	MH	10...1000 g/kg	1 g/kg		
Specific humidity	SH	10...1000 g/kg	1 g/kg		
Enthalpy	h	10...1000 kJ/kg	1 kJ/kg		
Current vapour pressure	VP	10...1000 hPa	1 hPa		
Saturation deficit	DVP	0...1000 hPa	1 hPa		

Outputs

Signal output

Analogue output	2 electrically isolated output channels, can be assigned to each of the measurement ranges, spread, error behaviour programmable
Output signal	0…20 mA or 4…20 mA (programmable), linear
Permissible load	≤ 500 Ω
Accuracy	≤ 0.2% of the associated measured value

Inputs

External water detector	24 V d.c., NPN
$T1_{extern}$	PT 100/ 4-conductor in accordance with DIN IEC 751

Data interface

Field bus interface	Profibus DB

Electrical data

Auxiliary power	Measuring unit: 90…264 V a.c., 47...63 Hz, approx. 30 VA
	Heating hose: 230 V or 115 V a.c.; approx. 100 VA/m

Relays

Warn relay	Display of warnings	Load: 1 A/24 V d.c., at least 10 mA
ERROR-relay	Display of failures	Load: 1 A/24 V d.c., at least 10 mA

Ambient conditions

Permitted working temperature	+5...+50°C
Permitted storage temperature	-20...+70°C (without water)
Climate category	KWF in accordance with DIN 40040
Reference conditions	23°C ±2°C / 230V ± 2%

Mechanical data

Enclosure	Stainless steel enclosure; protection rating IP64 in accordance with DIN 40050
Dimensions	450×410×150 mm (without mount)
Assembly drill holes	347x330 mm, 4×∅7x13mm (M6)
Weight	Approx. 12.5 kg
Connections	
Electrical connection	Screw terminals 0.5-1.5 mm^2; cable feed via M 16x1.5 cable gland
Compressed air connection	G 1/4"
Heating tube connection	G 3/8" (IP54) Universal conical nipple DKR DIN3863

Dimensions	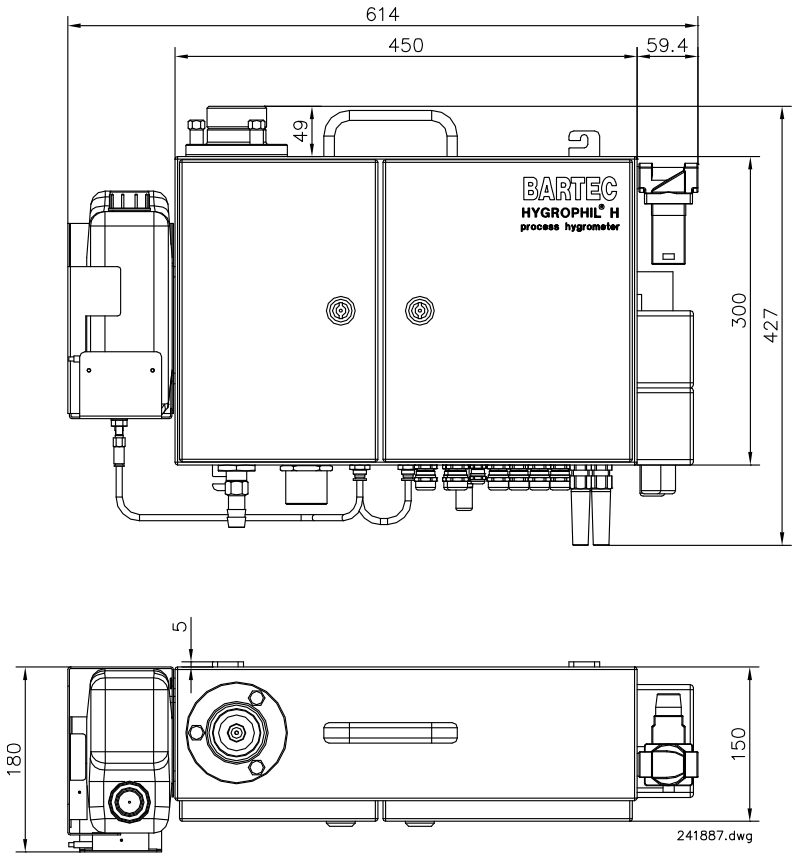
Assembly drill holes	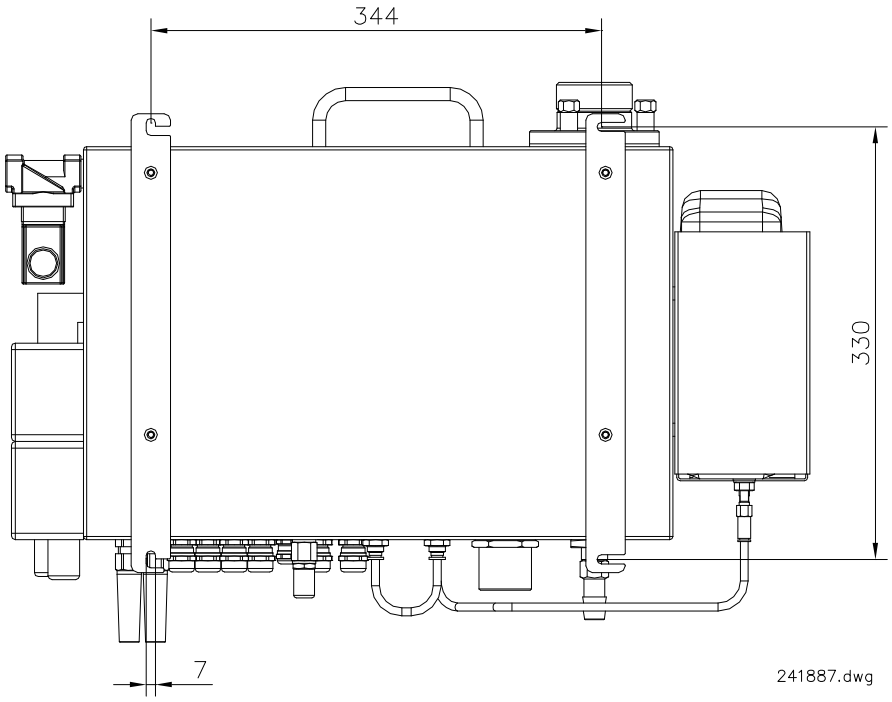

Assignment of terminals

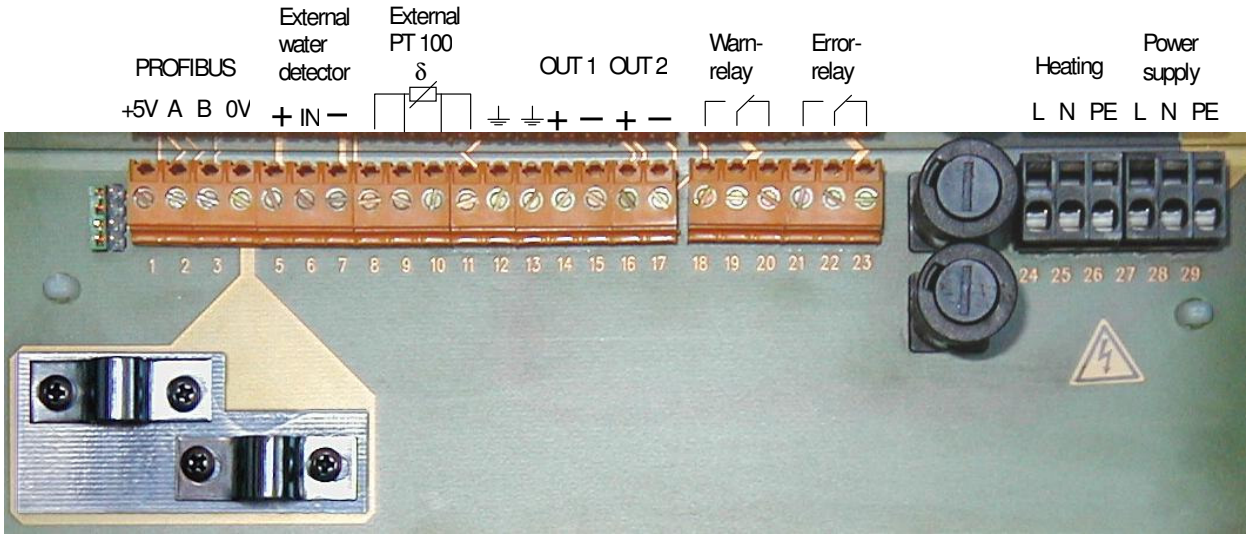

The Profibus cable is connected to terminals 2 (Profibus A) and 3 (Profibus B).

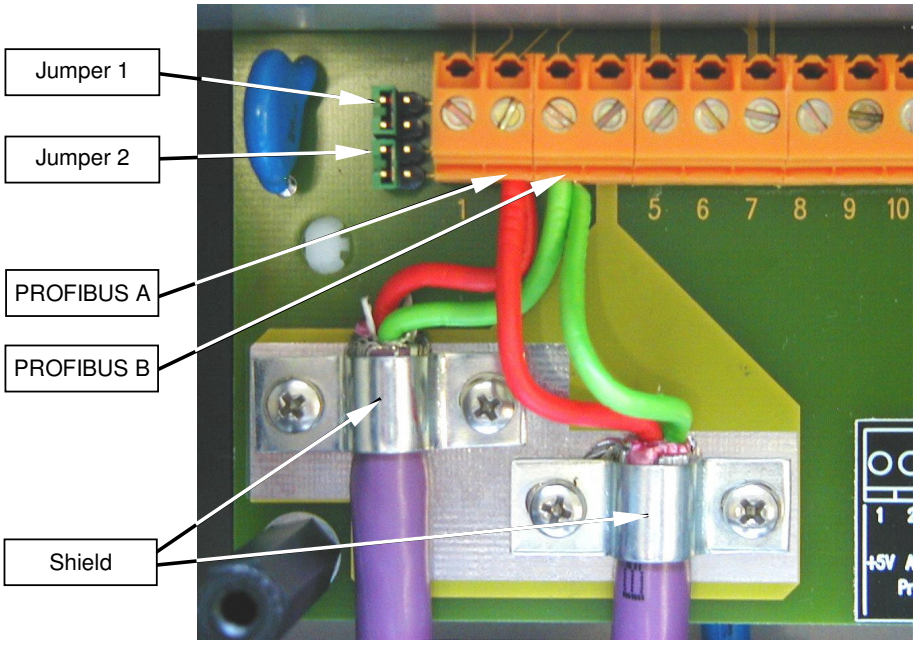

If the device is the last user on the Profibus, the two jumpers must be closed.

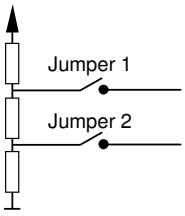

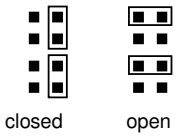

Details when ordering

Basic equipment

HYGROPHIL H 4230-12
Corrosion-proof, 230 V AC
Scope of delivery: Hygrophil-H in accordance with order number,
2 compressed air maintenance units, Type 4220-30 and 1 litre of surfactant

Order number: (230 V)	241485	Order number for 115 V version on request

Accessories

Measurement gas tube, Type 4230-100
Flexible, water-resistant heating tube for feeding measurement gas without condensate (max. input temperature 200 °C)
Including 12 mounts
Operating voltage: 230 V a.c. or 115 V a.c.
Connection type: Universal conical nipple G3/8" DKR DIN3863

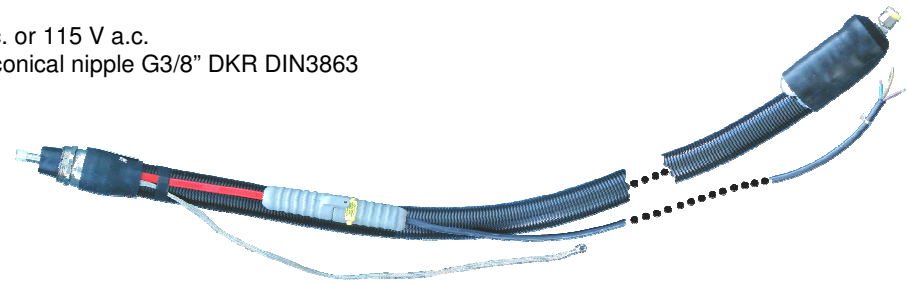

Order number: (230 V)	Length 12 m	241974	Order number for 115 V version on request

Water container 11l , Type 4230-102

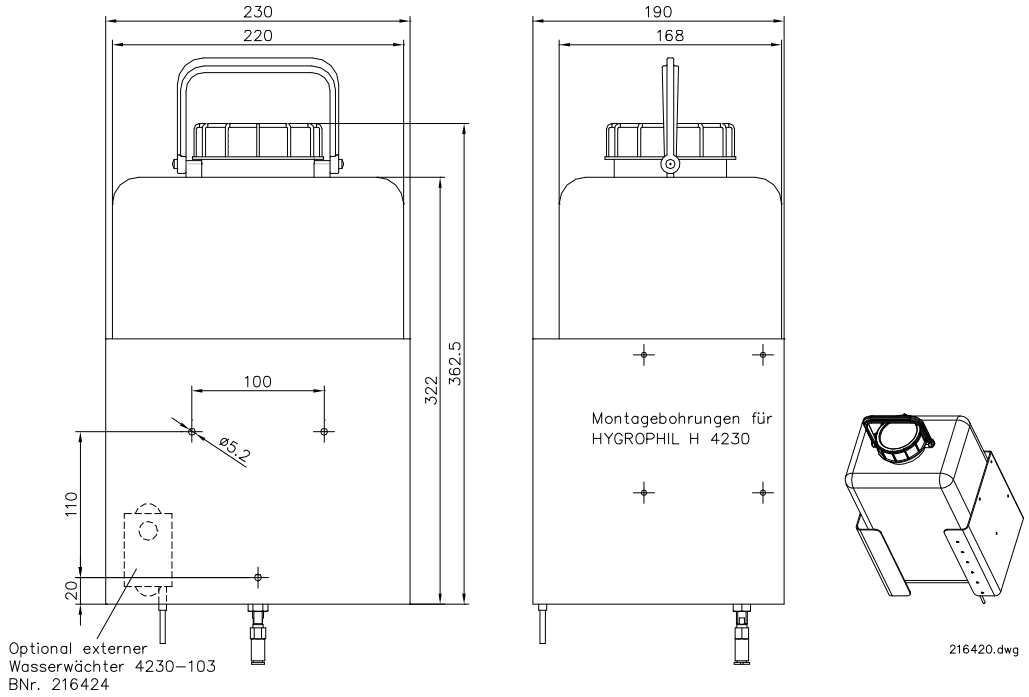

Order number:	216420

Adapter for heating tube, Type 4230-00-044
(DKR-3/8“ to NPT-1/4“)

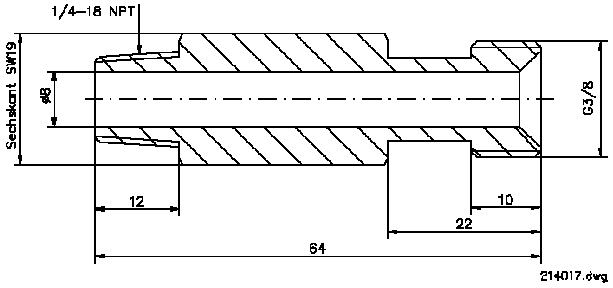

Order number: 214017

Adapter for heating tube, Type 4230-00-046
(DKR-3/8“ to 8 mm Swagelock)

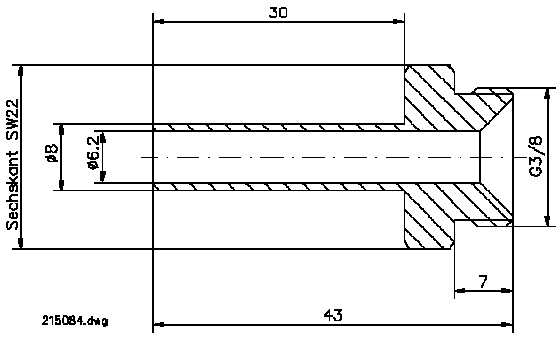

Order number: 215084

Standard filter, Type 4220-100
Including 150-µm sinter filter

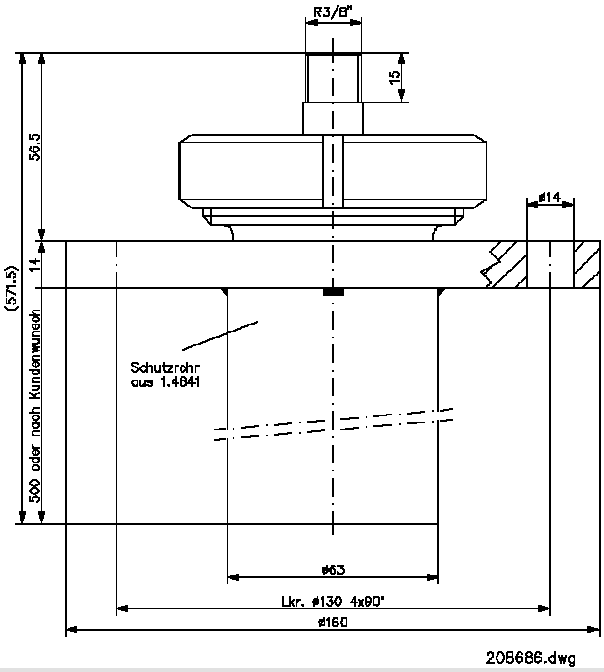

Order number: 208686

Gas sampling sensor Type SP 2000 GF 150

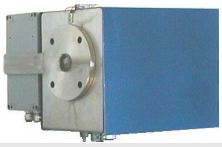

Order number: 214334

Sampling pipe for Gas sampling sensor Type SP 2000/SS

Order number: 214333

Adapter for heating tube 4220 to 4230, Type 4230-101

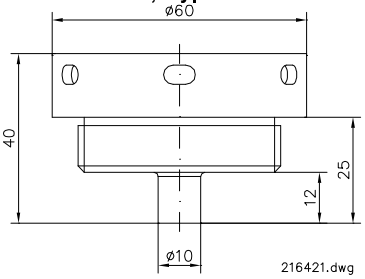

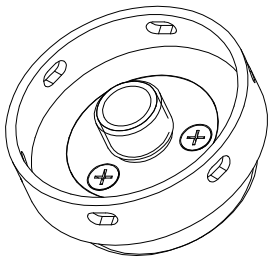

Order number: 216421

Wall mount, Type 4220-36

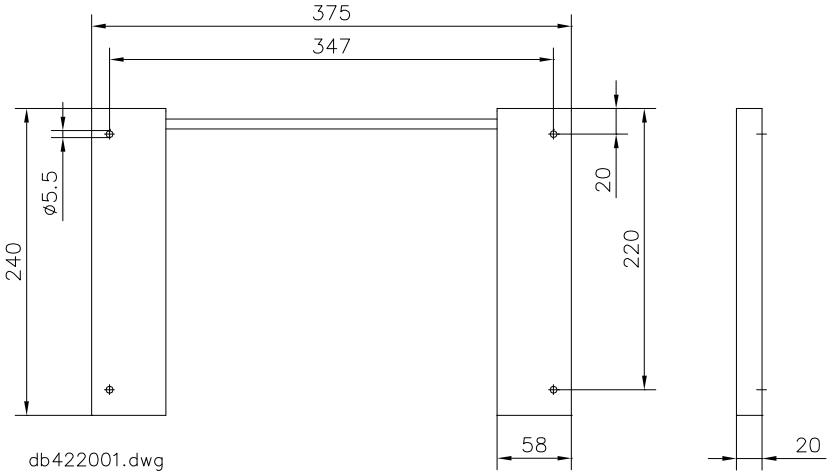

Order number: U 3401422036

Upright wall mount, Type 4220-35

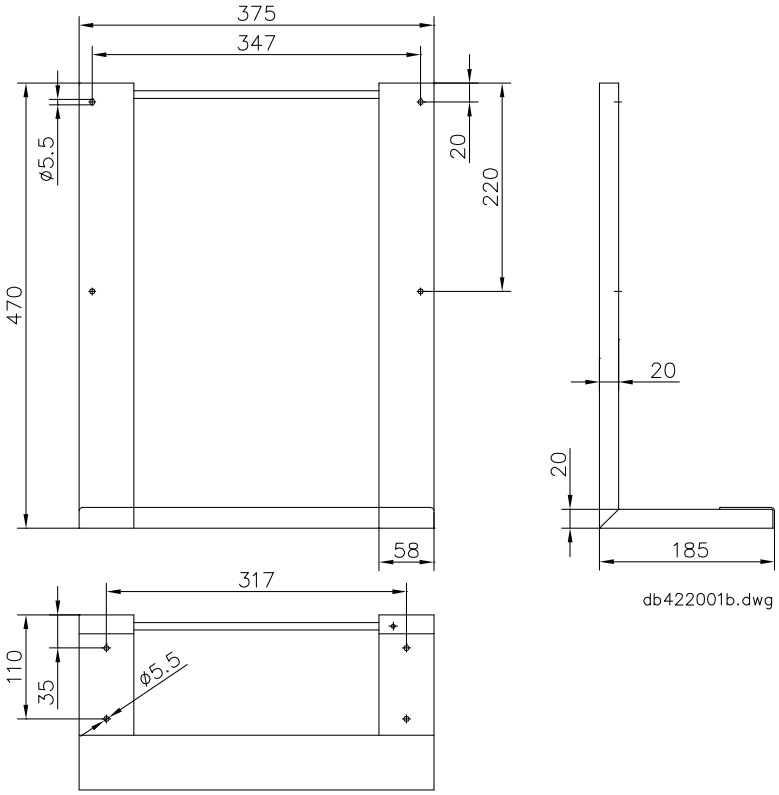

Order number: U 3401422035

Compressed air maintenance unit, Type 4220-30
With compressed air regulator and filter

Order number: U 3401422030

Spare parts / expendable items

Tube pump cartridge, Type 4230-104

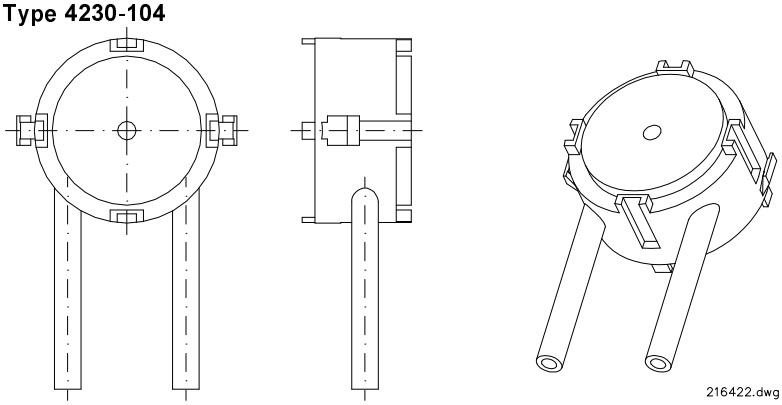

Order number: 216422

Measurement chamber with ejector, Type 4230-301
Without sensor

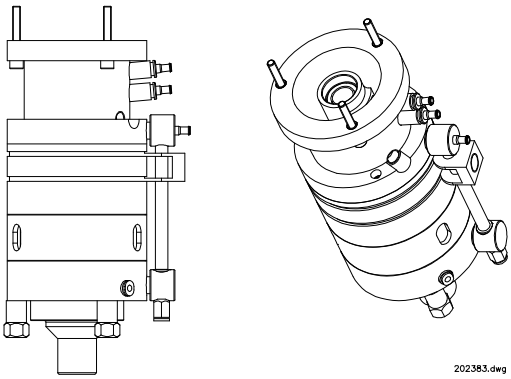

Order number: 202383

Water detector, Type 4230-302
For monitoring the fill level in the measuring cell

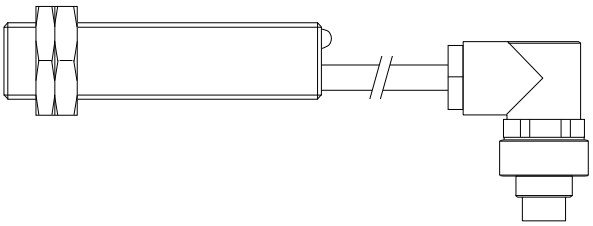

Order number: 202823

Pump drive, Type 4230-303

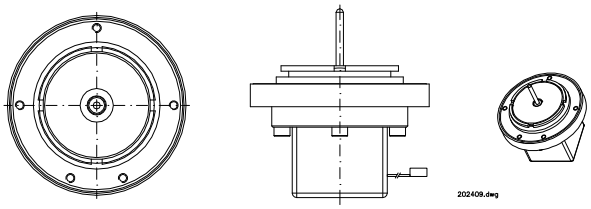

Order number: 202409

TT sensor, Type 4230-304

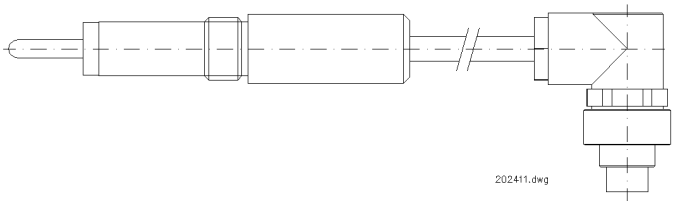

Order number: 202411

HT sensor, Type 4230-305

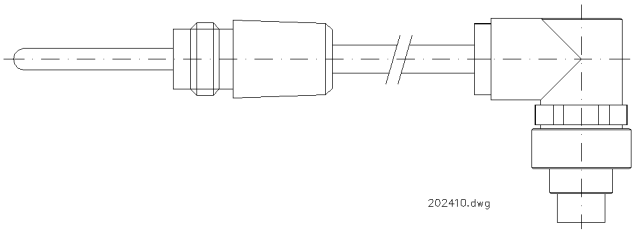

Order number: 202410

Proportional valve, Type 4230-308

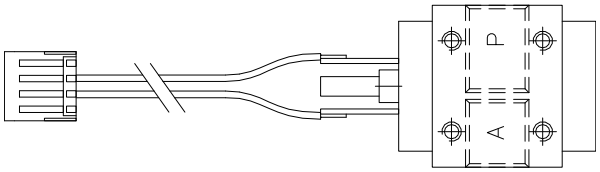

202781.dwg

Order number: 202781

Display/Profibus board, Type 4230-401

Order number: 214369

Elektronic board Type 4230-400

Order number: 202412

Surfactant
1l, PE bottle

Order number: U04014220201

Sinter filter , Type 4220-106
For standard filters
150 µm, Cr-Ni steel 1.4404

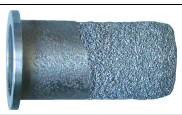

Order number: U0301116006

Glass fibre filter Type GF 150
for Gas sampling sensor Type SP 2000
0,1 µm

Order number: 220232