**Installation**: Safe Area

**Insulation Class**: I

| REFERENCE STANDARDS | |
|---|---|
| **CEI/EN** | |
| EXECUTION | INDUSTRIAL WEATHERPROOF |
| RULES OF COMPLIANCE | EN 60598-1 + A1; EN 60598-2-1 |
| EC Type-Examination Certificate | - |
| PROTECTION DEGREE | IP66 |
| AMBIENT TEMPERATURE | -20°C ÷ +60°C |

| Mechanical characteristics | |
|---|---|
| Body | glass fibre reinforced polyester resin self-extinguishing acc. to UL94 |
| Diffuser | U/V resistant polycarbonate - hinged to body |
| Safety closing | operated by hexagonal key |
| Gaskets | EPDM 60 rubber suitable for high temperatures and resistant to enviroments conditions |
| Internal reflector | white stove enamelled sheet aluminum |
| Cable entry | ISO-Metric complete with 2 PVC cable gland + 3 PVC stopping plug |

| Electrical characteristics for fluorescent lamps | |
|---|---|
| Power supply | dual channel electronic ballast:<br>- 110÷240Vac - 50/60 Hz (cos ρ ≥ 0,98)<br>- 110÷240Vdc |
| Emergency unit | emergency unit with autonomy from 180 min. (inverter) 220÷240V 50/60Hz |
| Lampholders | bi-pin G13 cap |
| Terminals | suitable up to 4 sq/mm cables |

| Electrical characteristics for LED strips lamp | |
|---|---|
| Power Supply | 220÷240V 50/60Hz (cos ρ ≥ 0,98) |
| Internal Wiring | 105° C resistant silicon rubber insulation cables |
| Terminals | suitable up to 4sq/mm cables through wiring terminal strip as standard |
| Emergency Unit | emergency unit composed of inverter charger and Ni-Cd battery pack 4A/h 6.0V autonomy 180min. |
| | LED power-on indicating lamp provided - (inverter) 220÷240V 50/60Hz |

**On Request Accessories:**

- Pole mounting kit complete with stainless steel hardware
- Ceiling mounting kit complete with stainless steel hardware
- Pendant mounting kit complete with stainless steel hardware
- Wall/Structure mounting kit complete with stainless steel hardware
- Electronic ballast with voltage supply different than standard
- Ex-de safety switch
- Up to 4 cable entries

### Technical data

| CODE | LAMP | TEMPERATURE CLASS (GAS) | TEMPERATURE CLASS (DUSTS) | LAMPHOLDER | ENTRY | EMERGENCY UNIT | AUTONOMY | DETAIL |
|---|---|---|---|---|---|---|---|---|
| **FLUORESCENT LIGHTING FIXTURES FOR SINGLE AND TWIN LAMPS - POWER SUPPLY (110÷240Vac - 50/60 Hz) - (110÷240Vdc)** | | | | | | | | |
| WFL-118 | 1 x 18W | - | - | G13 | 4 x M20 | - | - | A |
| WFL-136 | 1 x 36W | - | - | G13 | 4 x M20 | - | - | A |
| WFL-218 | 2 x 18W | - | - | G13 | 4 x M20 | - | - | A |
| WFL-236 | 2 x 36W | - | - | G13 | 4 x M20 | - | - | A |
| **EMERGENCY FLUORESCENT LIGHTING FIXTURES FOR SINGLE AND TWIN LAMPS - POWER SUPPLY (inverter) 220÷240V - 50/60Hz** | | | | | | | | |
| WFLE-118 | 1 x 18W | - | - | G13 | 4 x M20 | 4,8V - 4Ah | 180 min. | A |
| WFLE-136 | 1 x 36W | - | - | G13 | 4 x M20 | 4,8V - 4Ah | 180 min. | A |
| WFLE-218 | 2 x 18W | - | - | G13 | 4 x M20 | 4,8V - 4Ah | 180 min. | A |
| WFLE-236 | 2 x 36W | - | - | G13 | 4 x M20 | 4,8V - 4Ah | 180 min. | A |

| **LIGHTING FIXTURES FOR LED STRIPES LAMP ("TR" VERSION) - CCT: 5000K / CRI: 80 - POWER SUPPLY 220÷240Vac** | | | | | | |
|---|---|---|---|---|---|---|
| CODE | LAMP | TEMPERATURE CLASS (GAS) | TEMPERATURE CLASS (DUSTS) | OUTPUT (lm) | EMERGENCY UNIT | DIMENSIONALLY EQUIVALENT TO |
| WFL-66LED | 66 LED / 22W | - | - | 3180 | - | 18W FLUO. L=730 mm |
| WFL-132LED | 132 LED / 44W | - | - | 6340 | - | 36W FLUO. L=1340 mm |
| WFLE-66LED | 66 LED / 22W | - | - | 3180 | 6.0 V - 4Ah AUTONOMY 180 min. | 18W FLUO. L=730 mm |
| WFLE-132LED | 132 LED / 44W | - | - | 6340 | 6.0 V - 4Ah AUTONOMY 180 min. | 36W FLUO. L=1340 mm |

**Note**: LED stripes lamps included along with lighting fixtures
EMERGENCY OPERATING WITH 66 LED UNITS ONLY AS STANDARD

### Technical features

| CODE | A [mm] | B [mm] | C [mm] | D [mm] | WIGHT [Kg] | CABLE ENTRY | DETAIL |
|---|---|---|---|---|---|---|---|
| WFL-118 | 730 | 215 | 160 | 400 | 6,00 | 4 x M20 | A |
| WFL-136 | 1340 | 215 | 160 | 450 | 6,50 | 4 x M20 | A |
| WFL-218 / WFL-66LED | 730 | 215 | 160 | 400 | 7,00 | 4 x M20 | A |
| WFL-236 / WFL-132LED | 1340 | 215 | 160 | 450 | 7,50 | 4 x M20 | A |
| WFLE-118 | 730 | 215 | 160 | 400 | 11,00 | 4 x M20 | A |
| WFLE-136 | 1340 | 215 | 160 | 450 | 11,50 | 4 x M20 | A |
| WFLE-218 / WFLE-66LED | 730 | 215 | 160 | 400 | 12,00 | 4 x M20 | A |
| WFLE-236 / WFLE-132LED | 1340 | 215 | 160 | 450 | 12,50 | 4 x M20 | A |

### Reference details

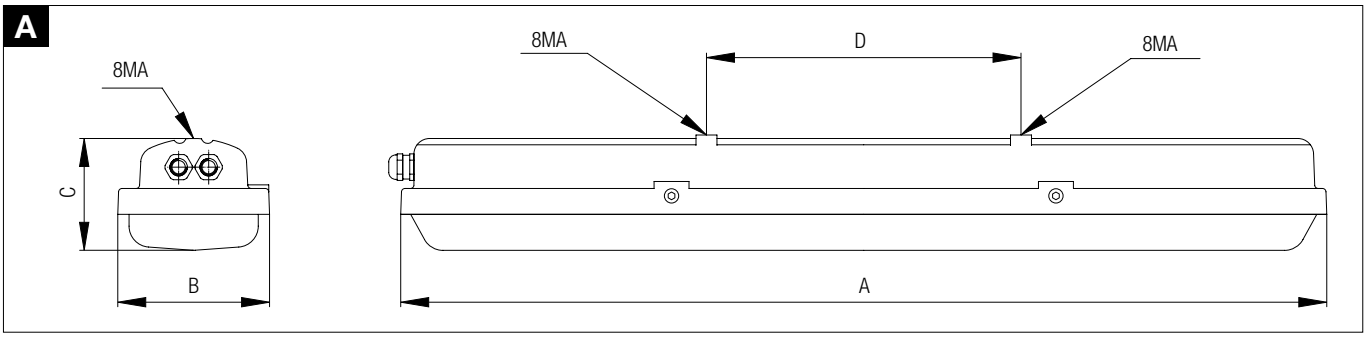

**Ceiling mounting**

**type 1**

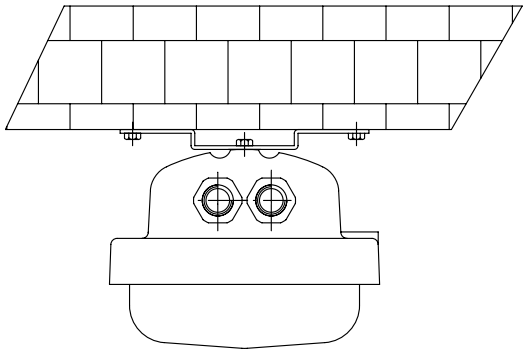

**Pendant mounting**

**type 2**

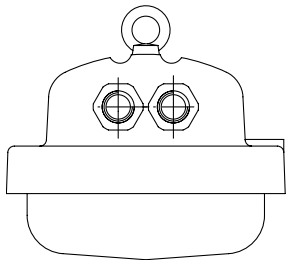

**Wall/structure mounting**

**type 3**

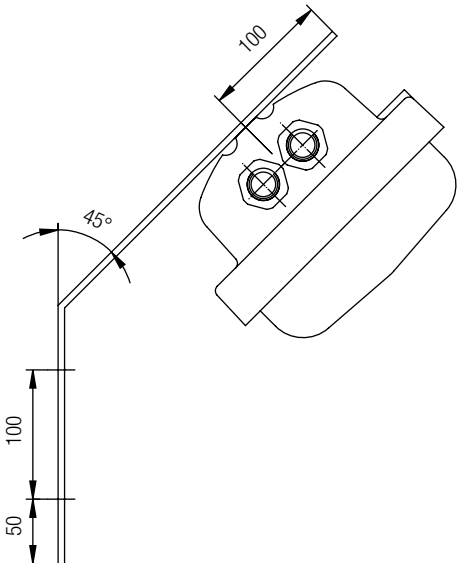


**Pole mounting. Assembling detail with pole (typical)**

**type 4**

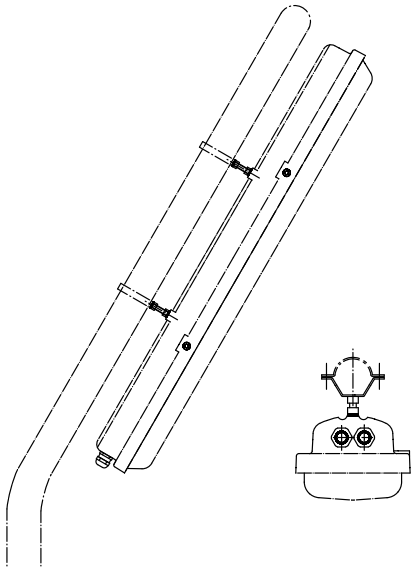

## **WFL** Polar diagrams – photometric data

### WFL-218

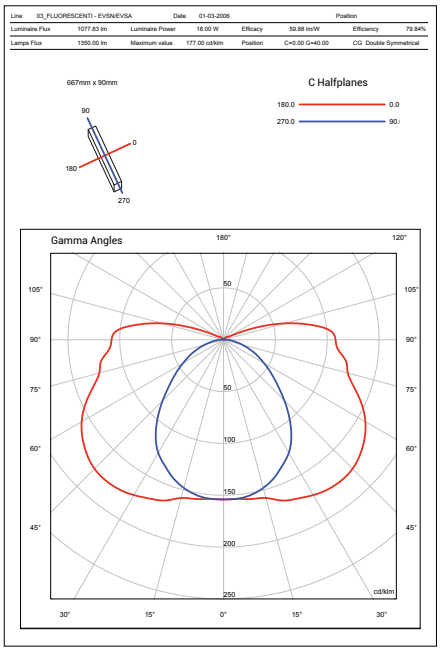


### WFL-136

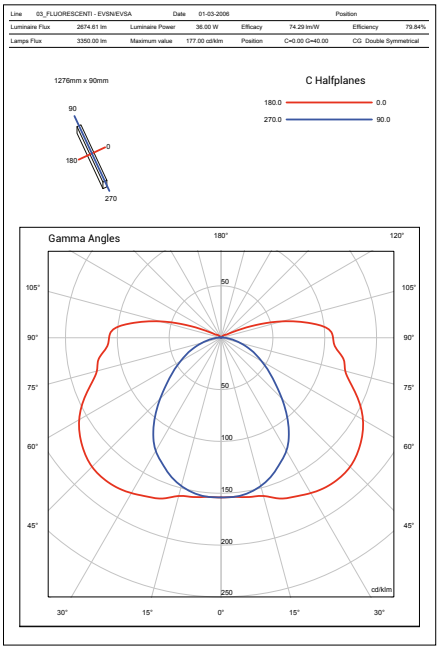


### WFL-236

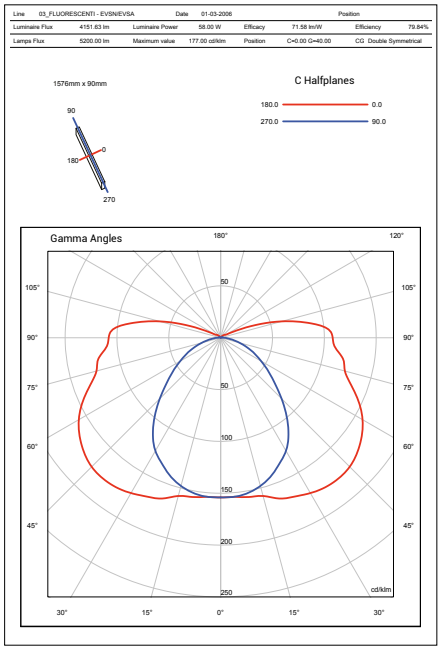

**On request accessories**

| CODE | DESCRIPTION | INSTALLATION | MATERIAL |
|---|---|---|---|
| KITFL#01000 | CEILING MOUNTING KIT C/W HARDWARE | TYPE 1 | STAINLESS STEEL |
| 20301.0165 | PENDANT MOUNTING KIT C/W HARDARE AND EYE-BOLTS | TYPE 2 | STAINLESS STEEL |
| 20302.0128 | WALL/STRUCTURE MOUNTING KIT C/W HARDWARE | TYPE 3 | GALVANIZED STEEL |
| 20301.0163 | POLE MOUNTING KIT (SIZE 1 1/2“ DIA.) C/W HARDWARE | TYPE 4 | STAINLESS STEEL |
| 20301.0162 | POLE MOUNTING KIT (SIZE 2“ DIA.) C/W HARDWARE | TYPE 4 | STAINLESS STEEL |
| 20301.0161 | POLE MOUNTING KIT (SIZE 1“ DIA.) C/W HARDWARE | TYPE 4 | STAINLESS STEEL |



REMARK:
Due to the development of the national and international specifications and of the technology, the above technical characteristics showed on this bulletin can be considered as binding on our confirmation only.